BRUGG Fatzer

Building Strong Connections

Structural Ropes

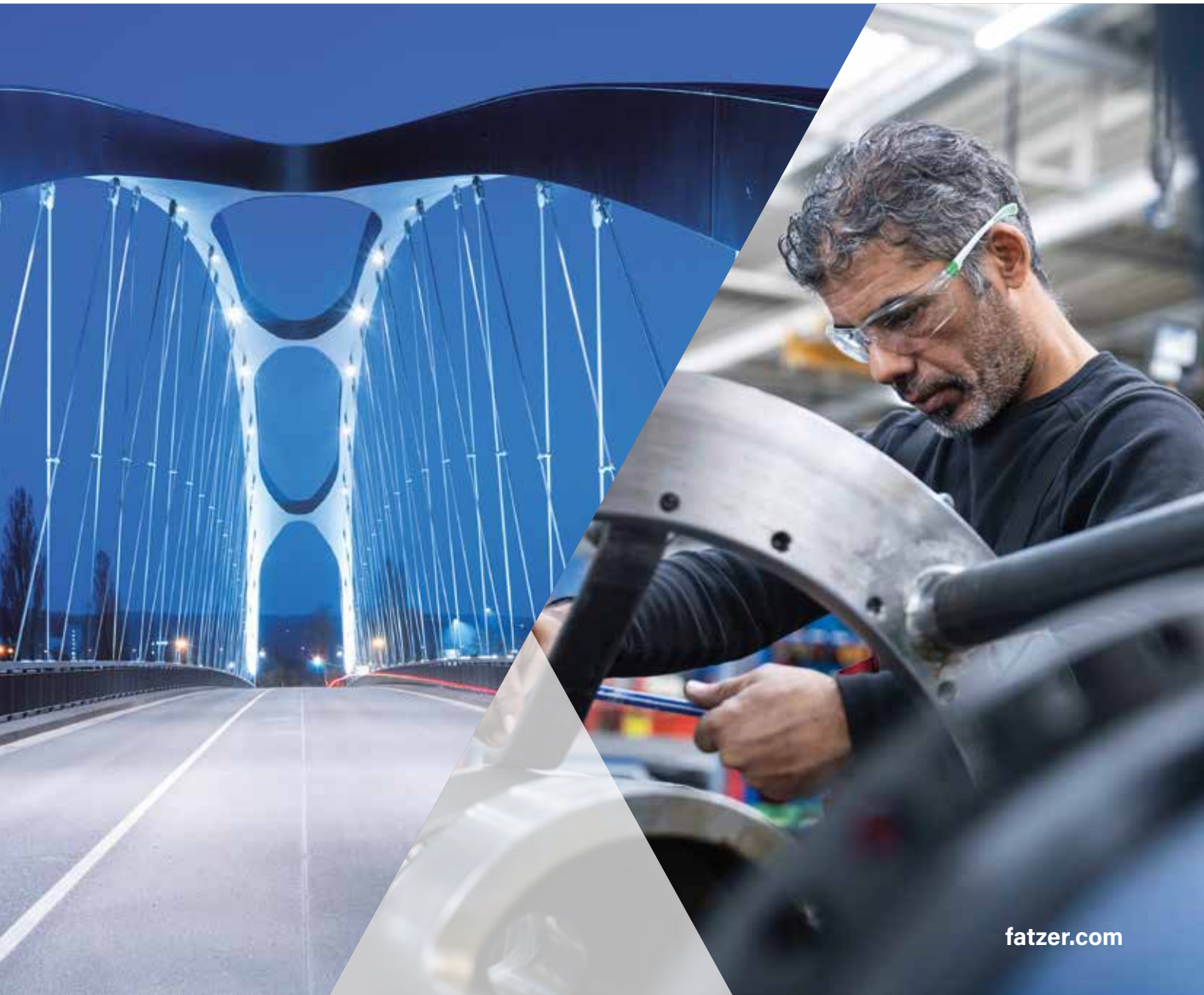

fatzer.com

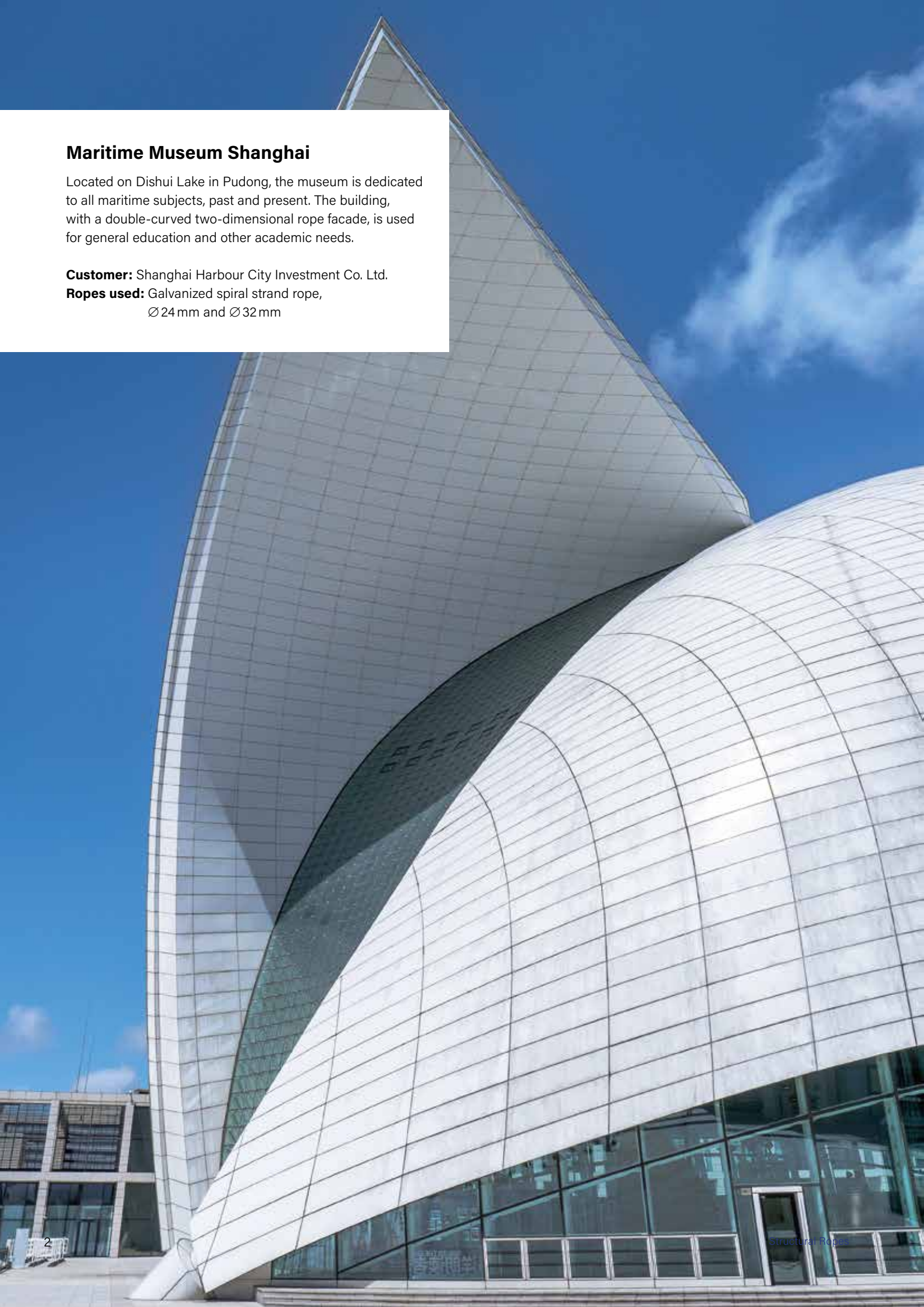

Maritime Museum Shanghai

Located on Dishui Lake in Pudong, the museum is dedicated to all maritime subjects, past and present. The building, with a double-curved two-dimensional rope facade, is used for general education and other academic needs.

Customer: Shanghai Harbour City Investment Co. Ltd.
Ropes used: Galvanized spiral strand rope, ∅ 24 mm and ∅ 32 mm

Quality and design for the architecture of tomorrow

Modern bridges, facades flooded with light, light roofs, and more: FATZER's coil ropes are used to design a wide variety of rope structures of the highest quality. Customers benefit from our wide array of expertise and a consistent focus on their needs. This expertise ranges from feasibility studies for individual rope solutions to installation and long-term monitoring.

High-strength coil ropes are indispensable elements in modern architecture and deliver lightweight yet stable construction architecture. They empower lightweight yet durable erections within a relatively short time frame, thanks to ready-made components from FATZER. The results of working with our ropes are seen worldwide. From impressive road and pedestrian bridges, spectacular stadium roofs, or glass facades in aesthetic designs, ropes from FATZER combine design freedom with safety and long service life.

Versatile ropes for versatile projects
From open and full locked coil ropes to swaged and spelter terminations, rope clamps, and connectors, and the rope tension measuring TRUpin: FATZER's product range includes all the components needed to make optimum use of coil ropes in an architectural environment. We can develop application-specific solutions to meet your demanding applications, such as spherical supports at the rope anchoring point, neoprene sleeves, centering shells, and dampers at bridge decks. Our ropes and accessories comply with international standards and meet the highest quality requirements. This way, products from FATZER provide ideal applications for safe, sustainable, and aesthetically inspiring rope structures over the long term.

Expertise from A to Z
With FATZER, you have a partner who supports you through all your project's phases. Our expertise ranges from unique production technology and best-in-class length reliability to feasibility studies, assembly concepts, and inventory assessments, through to logistics and monitoring. Our ropes also undergo rigorous quality monitoring to ensure all designated properties are traceable. At FATZER, you can expect the highest product quality, as well as our comprehensive services.

"High-strength coil ropes from FATZER answer all the needs of modern architecture."

Martin Bechtold – CEO FATZER AG

ETA-15/0917

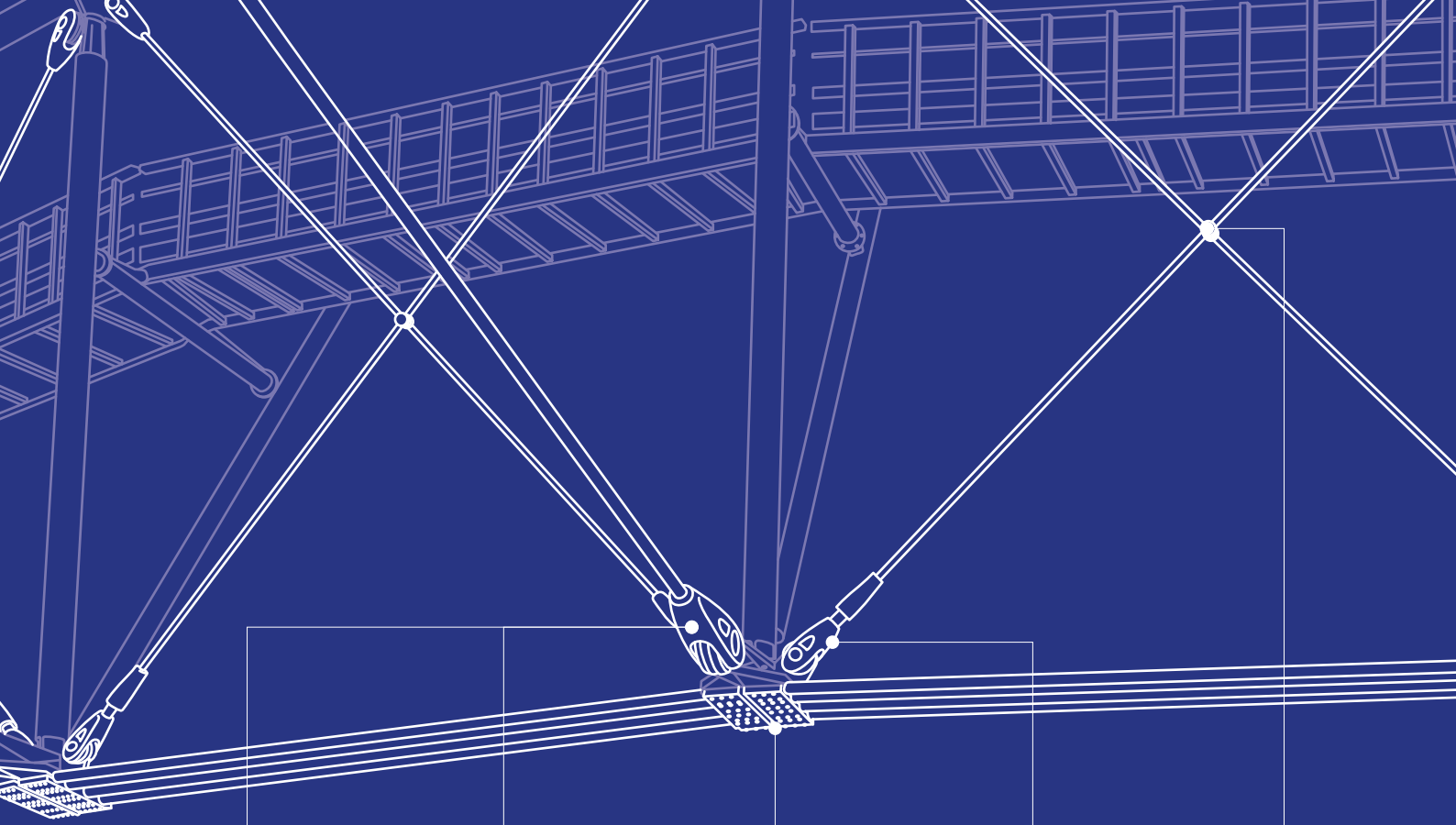

TRUlock
weather protection for
a longer service life

TRUpin
Rope tension monitoring
page 44

Rope connector
for connecting
the ring, radial, and
stiffening ropes

HYEND clevis adjustable
page 24

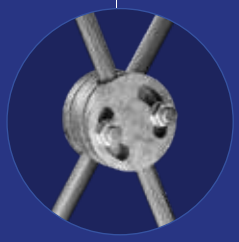

Cross clamp
Junction connection
for stabilization
of the ropes

Small material content,
maximum safety

Coil ropes for stadium roofs with the wow effect

Prestigious stadiums and venues today have imposing, lightweight roof structures. High-strength coil ropes from FATZER provide the perfect conditions for creating these. Our ropes' high-strength wires and flexibility offer significant benefits over rigid construction alternatives. FATZER customers also benefit from the highest product quality together with our engineering, certification, assembly, and logistics expertise.

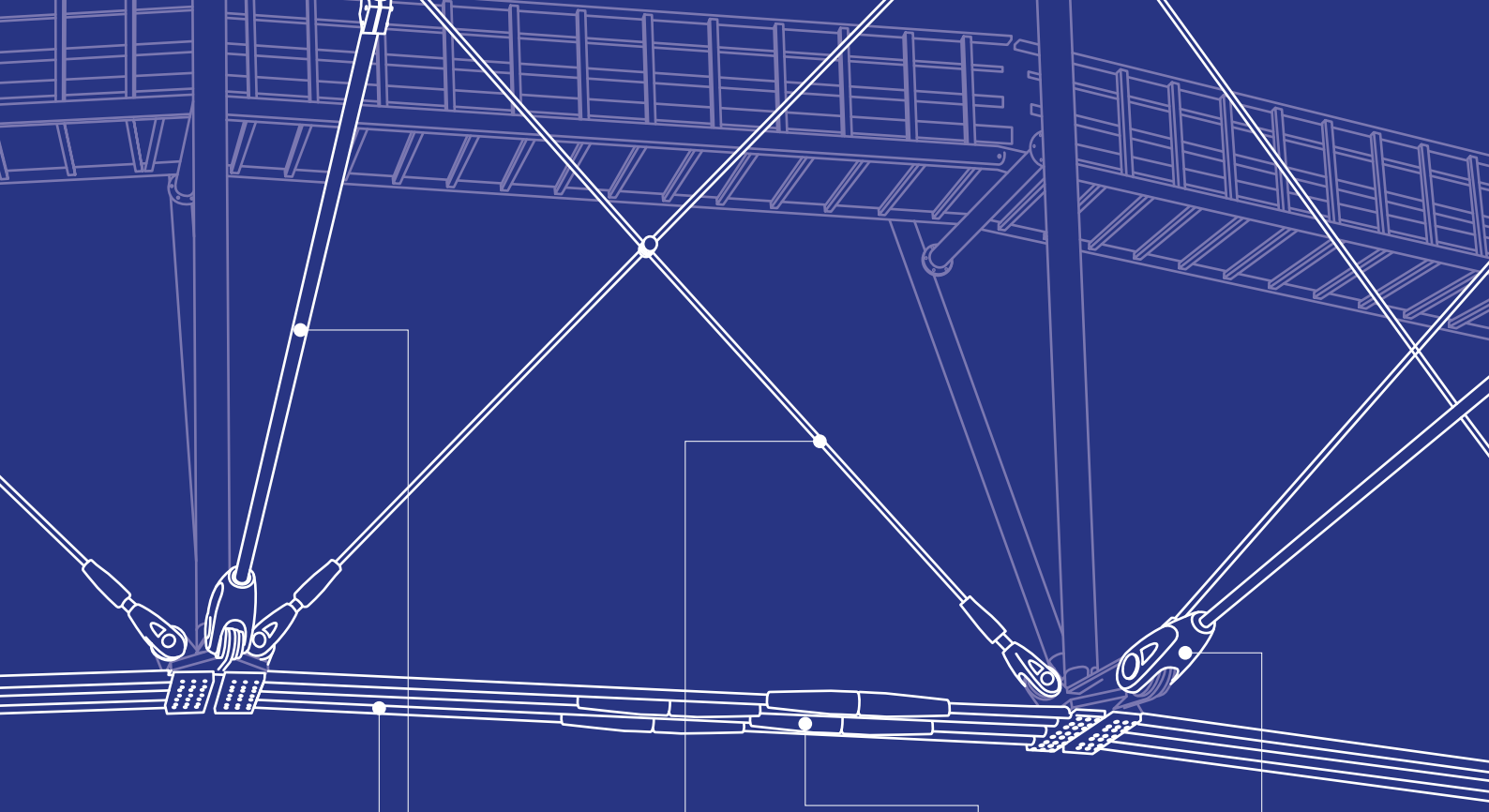

Ring ropes/ radial ropes
page 20

Stiffening ropes
page 20

Ring Rope coupling sleeves
page 38

HYEND clevis fix (not adjustable)
page 34

Short implementation times,
long-term success.

Our bridge coil cables combine functionality with aesthetics

Whether for road or pedestrian bridges: designs with spiral ropes from FATZER can be implemented quickly, as they arrive at the construction site ready-made and ready for installation. Maximum quality guarantees safety, and these bridges also stand out through their aesthetic appeal and functionality. Customers profit from our extensive expertise in engineering, certification, assembly, logistics, and support.

Cylindrical speltersocket with internal and external threads

TRUlock
Weather protection
for a longer service life

TRUpin rope tension monitoring
page 44

HYEND spelter sockets
page 34

Full locked coil (FLC) rope type
page 20

Neoprene sleeve (sealing)

Centering device

The best quality for tomorrow’s rope applications

Rope structures are favored throughout the world as structural elements. Combining aesthetic strengths with maximum safety requirements, they provide the possibility for efficient project implementation and material conservation. FATZER's products comprise the full variety of rope compositions and are supported by our comprehensive expertise in engineering, certification, assembly, logistics, and support.

Maracanã Stadium, Rio de Janeiro

The venue constructed in 1950 was completely renovated for the 2014 World Cup and 2016 Summer Olympics. It has a 74’738-spectator capacity for international matches. Brazil and England played the first international match on May 30, 2013, following the reopening, which ended with a score of 2:2.

Customer: Odebrecht Global Sourcing
Ropes used: FLC ∅35–110 mm, OSS, ∅14–24 mm
Weight: 1,000 tons of coil ropes, clamps, and connectors

Areas of application

Ready-made ropes from FATZER are designed for a wide range of applications. They meet national and international product and design standards as well as satisfy project-specific requirements. Solutions include static structures and structures subject to fatigue loads. Our purpose-specific solutions are suitable for both small and large-scale projects.

ETA-15/0917

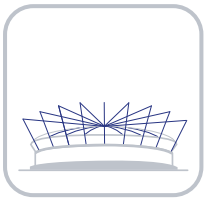

Stadium and arena roofs

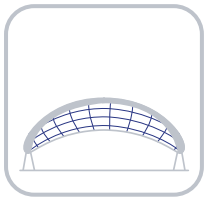

Glass and membrane roofs

Glass facades

Suspension bridges

Cable-stayed bridges

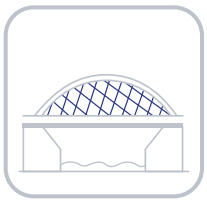

Tied arched bridges

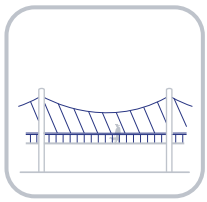

Bicycle and pedestrian bridges

Pipeline bridges

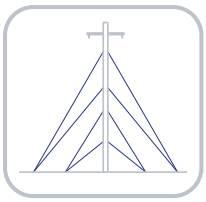

Guyed masts

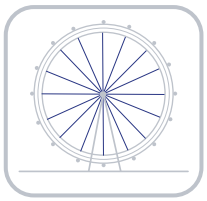

Ferris wheels

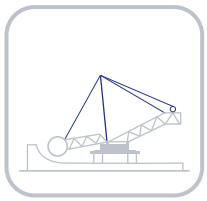

Bucket-wheel excavators and spreaders

Guyings for wind turbines and offshore platforms

From engineering to certification to
installation and condition assessments.

360° expertise with coil ropes

FATZER's services go far beyond producing ropes to the highest quality and safety standards. Customers benefit from 360° expertise and comprehensive services from the moment that we start working together: These range from planning to installation and monitoring of the ropes used.

Engineering

We provide customers with cable structure design and implementation support based on our many years of expertise. Our services include cost planning, feasibility studies, as well as installation and maintenance concepts. Additionally, we help them design and dimension the components that connect to the rope to ensure maximum compatibility.

How our engineering can benefit you

- Ability to plan costs
- Dimensioning of the required accessories
- Assembly without any surprises

Production

Our production facilities in Switzerland ensure that the quality of the coil ropes meets the most exacting standards. We perform comprehensive quality assurance tests, from individual wire fatigue tests to the finished rope's proof loading. The length accuracy for FATZER's ropes is highly reliable thanks to the digitized data flows incorporated into the production process.

Benefits of our production processes

- Swiss quality manufacturing
- Customized ultra-precise production
- Comprehensive materials testing

Certification

FATZER can supply you with all certificates required for commissioning. We will provide factory fabrication certificates and certificates from tensile tests to determine the effective breaking force, as well as from external inspection bodies. Our customers receive a complete documentation package for each order, including commissioning documents.

How our certifications benefit you

- ▲ Certifies high quality for all ropes and components
- ▲ CE certificate according to ETA-15/0917
- ▲ Availability of digital data for in-depth analyses

Logistics

Whether destined for a remote mountain region or an urban center, FATZER's logistics ensure that all coil ropes and material ordered are delivered reliably anywhere in the world. In addition to trains and trucks, we also rely on ships and special transportation methods to accommodate the most aggressive customer delivery requirements. FATZER will be happy to provide you with our expert assistance in selecting the optimal transportation method and planning your logistics solutions.

How our logistics can benefit you

- ▲ Logistic solutions tailored to your specific project requirements
- ▲ Smooth transportation management through planning, processing and monitoring of shipments
- ▲ Processing of international customs formalities

Assembly

In addition to custom-fit fabrication, we also provide the ropes with correct labeling. This ensures that the installation is completed quickly, according to plan, and free from error. Design and dimensioning of the assembly equipment are also part of the services we offer.

How our assembly services can benefit you

- Efficient implementation of rope structures
- No errors during the assembly process

Assessment of the condition and repair of existing structures

Bridges with cable structures have already been in use for decades in many locations. We support you in assessing the condition of existing structures in order to exclude any safety risks. If this is required for rope structures, we are also a reliable partner when it com-es to the repair or renewal of coil ropes.

How our condition assessments can benefit you

- Increased reliability
- Fulfillment of safety standards and regulations
- Global presence

Maximum speed for the new
Las Vegas Raiders stadium.

FATZER makes a significant contribution towards the USA's most advanced stadium

After the Raiders moved from Oakland to Las Vegas, the football team needed a stadium at its new location. This most technologically advanced stadium in the entire USA was built within 36 months. FATZER played a part by mastering the challenges posed by the new roof concept and assisting in the development of the innovative roof's customized installation program.

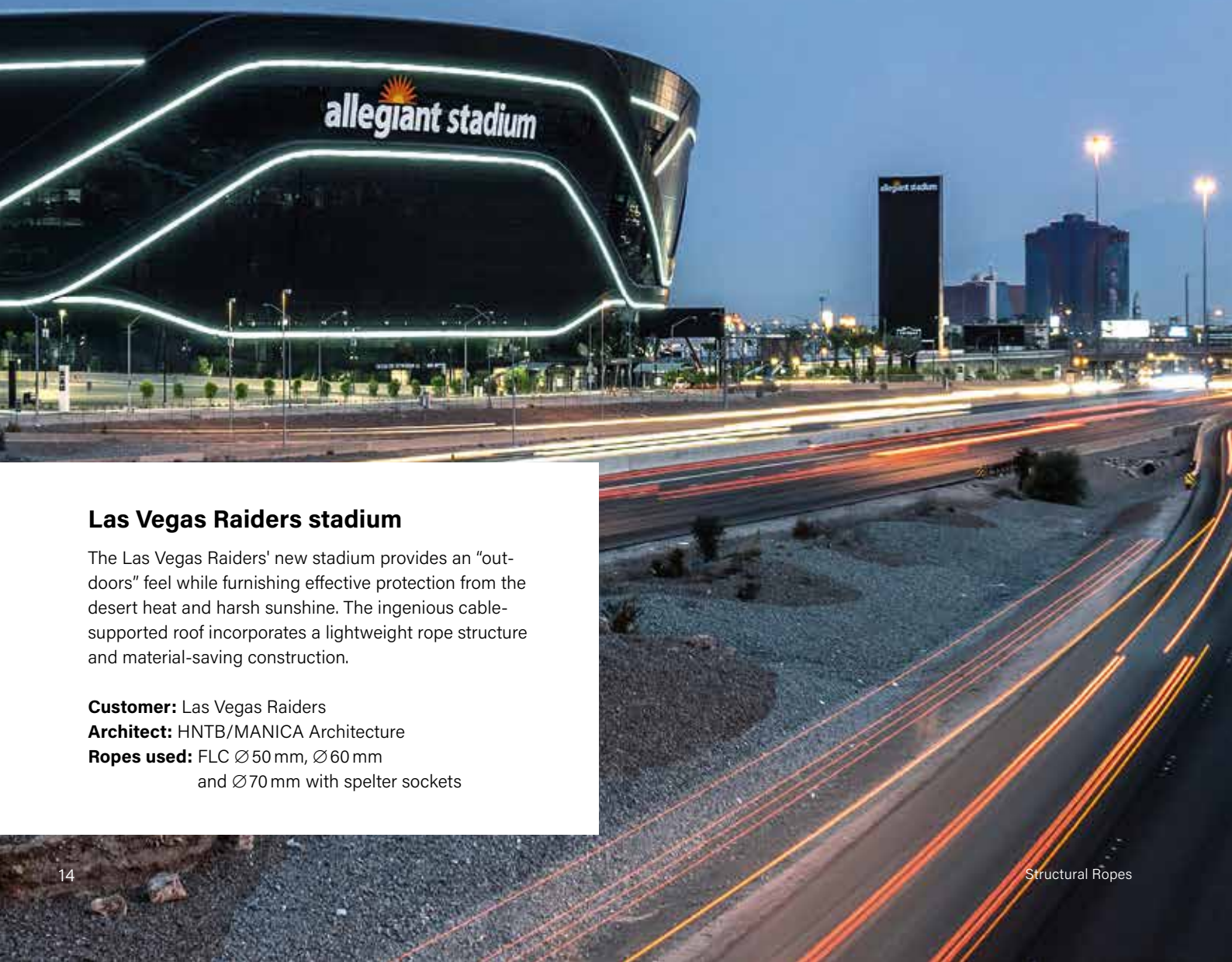

Las Vegas Raiders stadium

The Las Vegas Raiders' new stadium provides an "outdoors" feel while furnishing effective protection from the desert heat and harsh sunshine. The ingenious cable-supported roof incorporates a lightweight rope structure and material-saving construction.

Customer: Las Vegas Raiders
Architect: HNTB/MANICA Architecture
Ropes used: FLC ∅50 mm, ∅60 mm
and ∅70 mm with spelter sockets

The innovative ETFE roof system provides natural lighting and offers protection from the effects of the weather.

Desert heat and glaring sunshine are part of everyday life in Las Vegas. The new stadium's design included a full covering to ensure Las Vegas Raiders fans would be comfortable watching each game. A new type of ETFE roof system was employed with a lightweight cable structure, which allows natural lighting and still offers protection from the weather's effects. Although this innovative solution represented a challenge for FATZER, it was solved with masterful expertise. "The roof concept and in particular the size of the roof meant that we needed to come up with something new. Fortunately, we were involved in the project at an early stage and were able to act flexibly and adapt accordingly," explains David McSwiney, Director of Sales for Rope Construction at FATZER AG. "A new installation concept was developed which meant that the roof's design could finally be implemented smoothly."

Close cooperation for the best results

The stadium was built in Las Vegas as a design-build project. FATZER contributed its strengths as an experienced rope supplier partner and consultant and provided expertise during the planning and execution stages. This is particularly evident in the roof construction, which, thanks to its material-saving design, simultaneously conveys an "outdoor" feel and provides effective protection. The result is an iconic structure that can accommodate 65'000 people and was completed on time, as well as on budget.

On-time despite a tight schedule

An efficient approach is as highly valued by FATZER, as it is by our customers. All work was completed on time despite the large order volume and the distance between the production facility in Switzerland and the usage location in the USA. The most technologically advanced stadium in the USA became a reality within just 36 months of construction time and has delighted sports fans since then.

"We would like to give our sincere thanks to all of our partners. The early involvement as well as the close cooperation and open communication of all parties involved made it possible for a project of this type to become a success."

David McSwiney – Director of Sales FATZER AG

Spectacular entrance area at the Las Vegas Raiders stadium.

Planning Aid Overview

Contents

Rope types and terms	17
FATZER ropes	18
HYEND terminations	22
Quality and standards	46
Features	49

Key to the symbols

Galvanized

INOX

Swaged

Spelter

Rope types and terms

With coil ropes, the wires are arranged helically in multiple independent layers. The spiral strand rope is exclusively constructed using round wires. The fully locked coil rope also has layers with Z-profile wires. Ropes with terminations are also called prefabricated ropes.

Spiral strand rope (OSS)

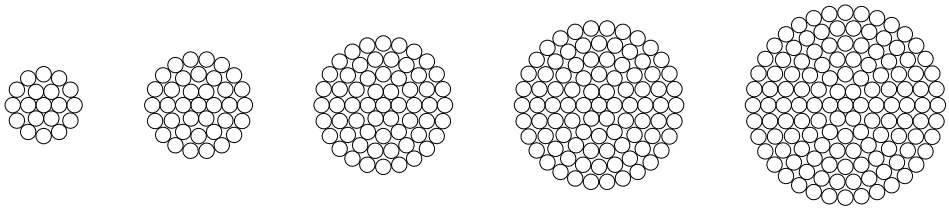

Full locked coil rope (FLC)

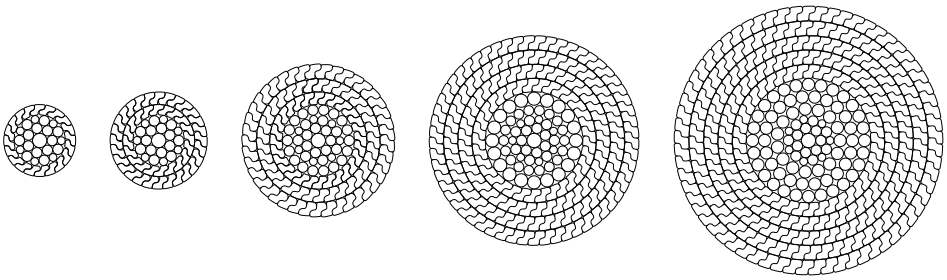

Spiral strand rope (OSS) DIN EN 12385-10

Material	High-strength wire made of unalloyed steel in accordance with DIN EN 10264-2
Elastic modulus	160 kN/mm² ± 10 kN/mm²
Diameter tolerance	0 % / +3 %
Assembly	d = 6–36 mm: Swaging in accordance with ETA-15/0917 d = 40–135 mm: Spelter in accordance with ETA-15/0917 with synthetic resin (e.g. WIRELOCK®) or metal (e.g. Zamak)
Corrosion protection	Zn95Al5 coated wires (e.g. Galfan®), no rope filler

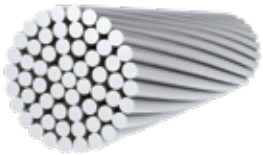

Nominal ∅ [mm]	Minimum breaking strengh F_{min} [kN]	Charact. breaking strengh F_{uk} (1) [kN]	Limit tension F_{Rd} (2) [kN]	Metal Nominal cross section A [mm²]	Stiffness EA [MN]	Weight G [kg/m]
6	37.7	33.9	22.6	22.0	3.52	0.2
8	67.5	60.7	40.5	39.4	6.31	0.3
10	105	94.4	62.9	61.3	9.81	0.5
12	150	135	90.3	87.9	14.1	0.7
14	204	184	123	119	19.1	1.0
16	266	240	160	156	24.9	1.3
18	331	298	199	198	31.6	1.6
20	408	368	245	244	39.0	2.0
22	494	445	297	295	47.3	2.4
24	591	532	355	353	56.5	2.9
26	693	624	416	414	66.3	3.4
28	792	713	475	479	76.6	3.9
30	907	816	544	548	87.7	4.5
32	1'034	931	620	625	99.9	5.1
34	1'169	1'052	702	706	113	5.8
36	1'298	1'168	779	793	127	6.5
40	1'450	1'450	967	929	149	7.7
45	1'830	1'830	1'220	1'180	189	9.8
50	2'260	2'260	1'507	1'450	232	12
55	2'730	2'730	1'820	1'750	280	15
60	3'250	3'250	2'167	2'090	334	17
65	3'810	3'810	2'540	2'450	392	20
70	4'430	4'430	2'953	2'840	454	24
75	5'080	5'080	3'387	3'260	522	27
80	5'790	5'790	3'860	3'710	594	31
85	6'530	6'530	4'353	4'190	670	35
90	7'320	7'320	4'880	4'700	752	39
95	8'160	8'160	5'440	5'240	838	44
100	9'040	9'040	6'027	5'800	928	48
105	9'990	9'990	6'660	6'400	1'024	53
110	10'900	10'900	7'267	7'020	1'123	58
115	12'000	12'000	8'000	7'680	1'229	64
120	13'000	13'000	8'667	8'360	1'338	69
125	14'100	14'100	9'400	9'060	1'450	75
130	15'300	15'300	10'200	9'810	1'570	81
135	16'500	16'500	11'000	10'600	1'696	88

Rope constructions vary depending on rope diameter – intermediate sizes on request
(1) DIN EN 1993-1-11 $F_{uk} = F_{min} \times k_e$; $k_e = 0.9$ (Swaged) $k_e = 1.0$ (Spelter, synthetic resin or metal)
(2) DIN EN 1993-1-11 $F_{Rd} = F_{uk} / (1.5 \times \gamma_R)$; $\gamma_R = 1.0$

05-23 Subject to change.

Spiral strand rope (OSS) DIN EN 12385-10

Material	High-strength wire made of stainless steel (Inox) 1.4401 (AISI 316) in accordance with DIN EN 10264-4 (1.4436, 1.4462 and others on request)
Elastic modulus	130 kN/mm² ± 10 kN/mm²
Diameter tolerance	0 % / +3 %
Assembly	d = 6–36 mm: Swaging in accordance with ETA-15/0917 d = 40–80 mm: Spelter in accordance with ETA-15/0917 with synthetic resin (e.g. WIRELOCK®)
Corrosion protection	Stainless steel (Inox), no rope filler

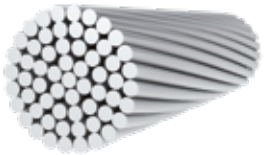

Nominal ∅ [mm]	Minimum breaking strengh F_{min} [kN]	Charact. breaking strengh F_{uk}(1) [kN]	Limit tension F_{Rd}(2) [kN]	Metal Nominal cross section A [mm²]	Stiffness EA [MN]	Weight G [kg/m]
6	31.8	28.6	19.1	22.0	2.86	0.2
8	56.3	50.7	33.8	39.0	5.07	0.3
10	87.7	79.0	52.6	60.7	7.90	0.5
12	127	114	76.3	88.0	11.4	0.7
14	173	155	104	120	15.5	1.0
16	216	194	129	154	20.1	1.3
18	276	248	165	197	25.6	1.6
20	340	306	204	244	31.7	2.0
22	410	369	246	293	38.1	2.4
24	489	440	294	350	45.5	2.9
26	572	515	343	410	53.3	3.4
28	662	596	397	474	61.6	3.9
30	753	677	452	545	70.8	4.5
32	854	769	513	618	80.4	5.1
34	968	871	581	701	91.1	5.8
36	1'083	975	650	784	102	6.5
38	1'086	1'086	724	838	109	6.9
40	1'198	1'198	799	929	121	7.7
45	1'517	1'517	1'011	1'180	153	9.8
50	1'873	1'873	1'248	1'450	189	12
55	2'266	2'266	1'511	1'750	228	14
60	2'706	2'706	1'804	2'090	272	17
65	3'165	3'165	2'110	2'450	319	21
70	3'680	3'680	2'453	2'840	369	24
75	4'213	4'213	2'809	3'260	424	27
80	4'803	4'803	3'202	3'710	482	31

Rope constructions vary depending on rope diameter – intermediate sizes on request
(1) DIN EN 1993-1-11 $F_{uk} = F_{min} \times k_e$; $k_e = 0.9$ (Swaged) $k_e = 1.0$ (Spelter, synthetic resin or metal)
(2) DIN EN 1993-1-11 $F_{Rd} = F_{uk} / (1.5 \times \gamma_R)$; $\gamma_R = 1.0$

05-23 Subject to change.

Full locked coil rope (FLC) DIN EN 12385-10

Material	High-strength wire made of unalloyed steel in accordance with DIN EN 1026 4-2 (round wire) and DIN EN 10264-3 (shaped wire)
Elastic modulus	160 kN/mm² ± 10 kN/mm²
Diameter tolerance	0 % / +3 %
Assembly	Spelter in accordance with ETA-15/0917 with synthetic resin (e.g. WIRELOCK®) or metal (e.g. Zamak)
Corrosion protection	Inner wire layers: Wires coated with zinc and filled internally with zinc dust paint (TRULub A11®) Outer two wire layers: Zn95Al5 coated wires (e.g. Galfan®), no rope filler

Nominal ∅ [mm]	Minimum breaking strengh F_{min} [kN]	Charact. breaking strengh F_{uk}(1) [kN]	Limit tension F_{Rd}(2) [kN]	Metal Nominal cross section A [mm²]	Stiffness EA [MN]	Weight G(3) [kg/m]
25	596	596	397	440	70	3.8
30	858	858	572	648	104	5.6
35	1'170	1'170	780	842	135	7.3
40	1'580	1'580	1'053	1'125	180	9.7
45	2'000	2'000	1'333	1'382	221	12
50	2'470	2'470	1'647	1'747	279	15
55	3'020	3'020	2'013	2'129	341	18
60	3'590	3'590	2'393	2'480	397	21
65	4'220	4'220	2'813	2'929	469	25
70	4'890	4'890	3'260	3'460	554	30
75	5'620	5'620	3'747	3'896	623	34
80	6'390	6'390	4'260	4'398	704	38
85	7'210	7'210	4'807	4'952	792	42
90	8'090	8'090	5'393	5'617	899	48
95	9'110	9'110	6'073	6'095	975	52
100	10'100	10'100	6'733	6'804	1'089	58
105	11'100	11'100	7'400	7'567	1'211	65
110	12'200	12'200	8'133	8'341	1'335	71
115	13'400	13'400	8'933	9'149	1'464	78
120	14'500	14'500	9'667	9'786	1'566	84
125	15'800	15'800	10'533	10'684	1'710	91
130	16'200	16'200	10'800	11'414	1'826	98
135	17'400	17'400	11'600	12'368	1'979	106
140	20'000	20'000	13'333	13'560	2'170	114
145	21'500	21'500	14'333	14'478	2'316	122
150	23'000	23'000	15'333	15'782	2'525	131

Number of shaped wire layers vary depending on rope diameter – intermediate sizes on request
(1) DIN EN 1993-1-11 $F_{uk} = F_{min} \times k_e$; $k_e = 1.0$ (Spelter, synthetic resin or metal)
(2) DIN EN 1993-1-11 $F_{Rd} = F_{uk} / (1.5 \times \gamma_R)$; $\gamma_R = 1.0$
(3) Including filler

05-23 Subject to change.

Full locked coil rope (FLC) DIN EN 12385-10

Material	High-strength wire made of stainless steel (Inox) 1.4401 (AISI 316) in accordance with DIN EN 10264-4 (1.4436, 1.4462 and others on request
Elastic modulus	130 kN/mm² ± 10 kN/mm²
Diameter tolerance	0 % / +3 %
Assembly	Spelter in accordance with ETA-15/0917 with synthetic resin (e.g. WIRELOCK®)
Corrosion protection	Stainless steel (Inox), no rope filler

Nominal ∅ [mm]	Minimum breaking strengh F_{min} [kN]	Charact. breaking strengh F_{uk}(1) [kN]	Limit tension F_{Rd}(2) [kN]	Metal Nominal cross section A [mm²]	Stiffness EA [MN]	Weight G [kg/m]
25	520	520	347	417	54	3.5
30	748	748	499	587	76	4.9
35	1'020	1'020	680	796	103	6.6
40	1'362	1'362	908	1'039	135	8.7
45	1'726	1'726	1'151	1'317	171	11
50	2'147	2'147	1'431	1'638	213	14
55	2'598	2'598	1'732	1'966	256	16
60	3'032	3'032	2'021	2'296	299	19
65	3'638	3'638	2'425	2'745	357	23
70	4'169	4'169	2'779	3'128	407	26
75	4'708	4'708	3'138	3'537	460	29
80	5'469	5'469	3'646	4'099	533	34

Number of shaped wire layers vary depending on rope diameter – intermediate sizes on request
(1) DIN EN 1993-1-11 $F_{uk} = F_{min} \times k_e$; $k_e = 1.0$ (Spelter, synthetic resin)
(2) DIN EN 1993-1-11 $F_{Rd} = F_{uk} / (1.5 \times \gamma_R)$; $\gamma_R = 1.0$

05-23 Subject to change.

HYEND open socket

Corrosion protection Hot-dip galvanized (internal thread blank)
Assembly Swaging in accordance with ETA-15/0917

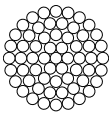

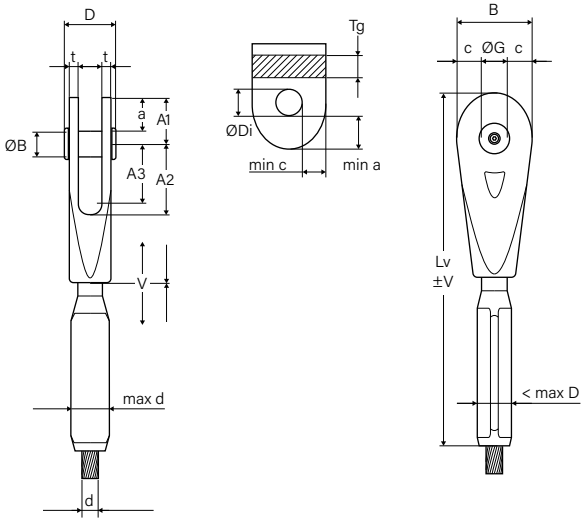

max d [mm]	B [mm]	c [mm]	∅G [mm]	D [mm]	t [mm]	∅ B [mm]	a [mm]	A1 [mm]	A2 [mm]	A3 [mm]	~max D(1) [mm]	~Lv(1) [mm]	V [mm]	max Tg(3) [mm]	∅ Di(3) [mm]	G(2) [kg]	min c [mm] min a [mm]
6	38.0	11.5	15	31	4.0	14	16	23.5	37.5	31.0	18	185	±8	11	15	0.3	In accordance with EN 1993-1-8 Chapter 3.13.1, Table 3.9
8	38.0	11.5	15	31	4.0	14	16	23.5	37.5	31.0	18	202	±8	11	15	0.3	
10	57.5	17.8	22	44	6.5	20	25	36.0	55.0	45.0	26	276	±11	18	22	1.4	
12	57.5	17.8	22	44	6.5	20	25	36.0	55.0	45.0	26	293	±11	18	22	1.4	
14	75.5	23.8	28	57	9.0	26	34	47.5	72.5	59.5	34	363	±14	24	28	3.1	
16	75.5	23.8	28	57	9.0	26	34	47.5	72.5	59.5	34	380	±14	24	28	3.1	
18	93.5	29.8	34	65	11.0	32	42	59.0	89.0	74.0	45	465	±17	28	34	5.9	
20	93.5	29.8	34	65	11.0	32	42	59.0	89.0	74.0	45	482	±17	28	34	5.9	
22	111	34.8	41	78	13.0	39	49	69.5	107	88.0	52	548	±21	35	41	9.7	
24	111	34.8	41	78	13.0	39	49	69.5	107	88.0	52	565	±21	35	41	9.8	
26	128	39.8	48	89	15.5	46	56	80.0	123	101	59	642	±25	41	48	16	
28	128	39.8	48	89	15.5	46	56	80.0	123	101	59	658	±25	41	48	16	
30	145	44.8	55	103	17.5	53	63	90.5	140	115	73	727	±27	47	55	24	
32	145	44.8	55	103	17.5	53	63	90.5	140	115	73	744	±27	47	55	24	
34	158	47.8	62	113	20.0	60	68	99.0	154	127	76	791	±30	52	62	30	
36	158	47.8	62	113	20.0	60	68	99.0	154	127	76	808	±30	52	62	31	

(1) After swaging
(2) Total weight of all components
(3) Maximum design value. Load-bearing capacity verification at customer site in accordance with EN 1993-1-8

05-23 Subject to change.

HYEND open socket

Corrosion protection Stainless steel (Inox) 1.4462 / 1.4470[4]
Assembly Swaging in accordance with ETA-15/0917

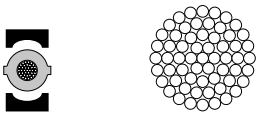

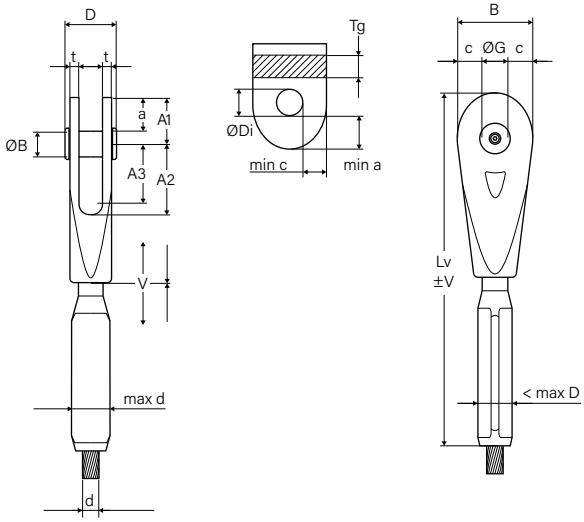

max d [mm]	B [mm]	c [mm]	∅G [mm]	D [mm]	t [mm]	∅B [mm]	a [mm]	A1 [mm]	A2 [mm]	A3 [mm]	~max D[1] [mm]	~Lv[1] [mm]	V [mm]	max Tg[3] [mm]	∅Di[3] [mm]	G[2] [kg]	min c [mm] min a [mm]
6	38.0	11.5	15	31	4.0	14	16	23.5	37.5	31.0	15	177	±8	11	15	0.3	In accordance with EN 1993-1-8 Chapter 3.13.1, Table 3.9
8	38.0	11.5	15	31	4.0	14	16	23.5	37.5	31.0	15	193	±8	11	15	0.3	
10	57.5	17.8	22	44	6.5	20	25	36.0	55.0	45.0	23	268	±11	18	22	1.2	
12	57.5	17.8	22	44	6.5	20	25	36.0	55.0	45.0	23	284	±11	18	22	1.2	
14	75.5	23.8	28	57	9.0	26	34	47.5	72.5	59.5	31	351	±14	24	28	2.8	
16	75.5	23.8	28	57	9.0	26	34	47.5	72.5	59.5	31	367	±14	24	28	2.8	
18	93.5	29.8	34	65	11.0	32	42	58.5	89.5	74.5	38	444	±17	28	34	5.1	
20	93.5	29.8	34	65	11.0	32	42	58.5	89.5	74.5	38	460	±17	28	34	5.1	
22	111	34.8	41	78	13.0	39	49	69.0	107	88.5	45	531	±21	35	41	8.8	
24	111	34.8	41	78	13.0	39	49	69.0	107	88.5	45	547	±21	35	41	8.8	
26	128	39.8	48	89	15.5	46	56	80.0	123	101	52	623	±25	41	48	14	
28	128	39.8	48	89	15.5	46	56	80.0	123	101	52	640	±25	41	48	14	
30	145	44.8	55	99	17.0	53	63	90.0	140	117	60	701	±27	44	55	20	
32	145	44.8	55	99	17.0	53	63	90.0	140	117	60	718	±27	44	55	20	
34	158	47.8	62	113	20.0	60	68	99.0	154	127	67	771	±30	52	62	28	
36	158	47.8	62	113	20.0	60	68	99.0	154	127	67	787	±30	52	62	28	

(1) After swaging
(2) Total weight of all components
(3) Maximum design value.Load-bearing capacity verification at customer site in accordance with EN 1993-1-8 in accordance with EN 1993-1-8
(4) 1.4462 for machined parts; 1.4470 for cast parts equal in material properties and corrosion resistance.

05-23 Subject to change.

HYEND adjustable open socket

Corrosion protection Hot-dip galvanized (internal thread blank)
Assembly Swaging in accordance with ETA-15/0917

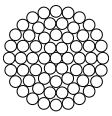

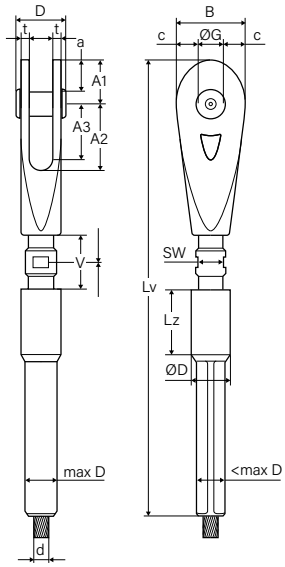

max d [mm]	∅D [mm]	SW [mm]	~max D(1) [mm]	~max Lv(1) [mm]	V [mm]	G(2) [kg]
6	21	14	18	243	±16	0.5
8	21	14	18	260	±16	0.5
10	33	21	26	364	±22	1.8
12	33	21	26	381	±22	1.9
14	44	26	34	472	±28	4.3
16	44	26	34	489	±28	4.4
18	52	32	45	589	±34	8.0
20	52	32	45	606	±34	8.2
22	63	41	52	706	±40	13
24	63	41	52	723	±40	14
26	74	46	59	824	±46	22
28	74	46	59	840	±46	22
30	84	60	73	940	±52	33
32	84	60	73	957	±52	34
34	94	65	76	1'038	±62	43
36	94	65	76	1'055	±62	44

Remaining dimensions
as for HYEND open sockets

(1) After swaging
(2) Total weight of all components

05-23 Subject to change.

HYEND adjustable open socket

Corrosion protection Stainless steel (Inox) 1.4462 / 1.4470[3]
Assembly Swaging in accordance with ETA-15/0917

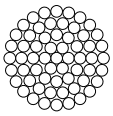

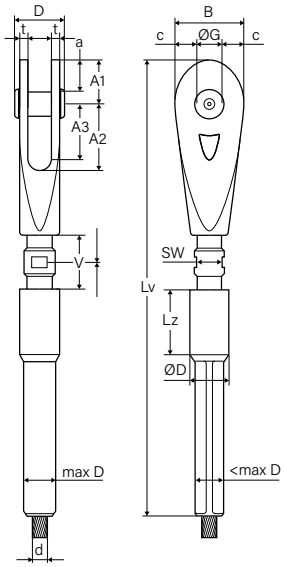

max d [mm]	∅D [mm]	SW [mm]	~max D[1] [mm]	~max Lv[1] [mm]	V [mm]	G[2] [kg]
6	21	14	18	243	±16	0.5
8	21	14	18	260	±16	0.5
10	33	21	26	364	±22	1.8
12	33	21	26	381	±22	1.9
14	44	26	34	472	±28	4.3
16	44	26	34	489	±28	4.4
18	52	32	45	589	±34	8.0
20	52	32	45	606	±34	8.2
22	63	41	52	706	±42	13
24	63	41	52	723	±42	14
26	74	46	59	824	±49	22
28	74	46	59	840	±49	22
30	84	60	73	940	±54	33
32	84	60	73	957	±54	34
34	94	65	76	1'038	±60	43
36	94	65	76	1'055	±60	44

Remaining dimensions
as for HYEND open sockets

(1) After swaging
(2) Total weight of all components
(3) 1.4462 for machined parts; 1.4470 for cast parts equal in material properties and corrosion resistance

05-23 Subject to change.

HYEND adjustable closed socket

Corrosion protection Hot-dip galvanized (internal thread blank)
Assembly Swaging in accordance with ETA-15/0917

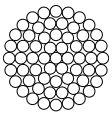

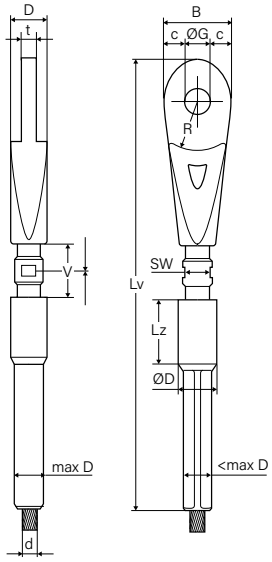

max d [mm]	∅D [mm]	SW [mm]	~max D(1) [mm]	~max Lv(1) [mm]	V [mm]	G(2) [kg]
6	21	14	18	255	±16	0.6
8	21	14	18	272	±16	2.0
10	33	21	26	383	±22	2.0
12	33	21	26	400	±22	4.6
14	44	26	34	497	±28	4.7
16	44	26	34	514	±28	8.5
18	52	32	45	617	±34	8.7
20	52	32	45	634	±34	15
22	63	41	52	745	±40	15
24	63	41	52	762	±40	23
26	74	46	59	870	±46	24
28	74	46	59	886	±46	36
30	84	60	73	993	±52	36
32	84	60	73	1'010	±52	46
34	94	65	76	1'094	±62	47
36	94	65	76	1'111	±62	44

Remaining dimensions
as for HYEND open sockets

(1) After swaging
(2) Total weight of all components

05-23 Subject to change.

HYEND adjustable closed socket

Corrosion protection Stainless steel (Inox) 1.4462 / 1.4470[3]
Assembly Swaging in accordance with ETA-15/0917

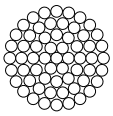

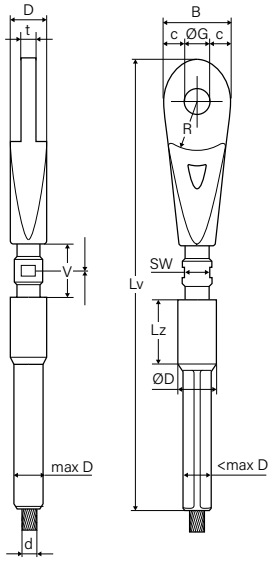

max d [mm]	∅D [mm]	SW [mm]	~max D[1] [mm]	~max Lv[1] [mm]	V [mm]	G[2] [kg]
6	21	14	15	254	±16	0.5
8	21	14	15	270	±16	0.5
10	33	19	23	379	±22	1.9
12	33	19	23	395	±22	1.9
14	44	26	31	493	±28	4.4
16	44	26	31	509	±28	4.5
18	52	32	38	614	±34	7.9
20	52	32	38	630	±34	8.0
22	63	36	45	738	±42	14
24	63	36	45	754	±42	14
26	74	46	52	862	±49	22
28	74	46	52	879	±49	22
30	80	50	60	972	±54	30
32	80	50	60	989	±54	31
34	94	60	67	1'074	±60	43
36	94	60	67	1'090	±60	44

Remaining dimensions
as for HYEND open sockets

(1) After swaging
(2) Total weight of all components
(3) 1.4462 for machined parts; 1.4470 for cast parts equal in material properties and corrosion resistance

05-23 Subject to change.

HYEND open socket with turnbuckle

Corrosion protection Hot-dip galvanized (internal thread blank)
Assembly Swaging in accordance with ETA-15/0917

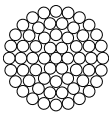

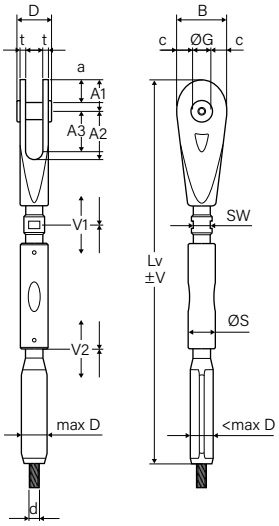

max d [mm]	∅ S [mm]	SW [mm]	~max D(1) [mm]	~Lv(1) [mm]	V1 [mm]	V2 [mm]	V [mm]	G(2) [kg]
6	23	14	18	302	±16	±8	±24	0.6
8	23	14	18	319	±16	±8	±24	0.6
10	34	21	26	447	±22	±11	±33	2.3
12	34	21	26	464	±22	±11	±33	2.3
14	44	26	34	580	±28	±14	±42	4.9
16	44	26	34	597	±28	±14	±42	4.9
18	53	32	45	730	±34	±17	±51	9.1
20	53	32	45	747	±34	±17	±51	9.1
22	66	41	52	868	±40	±20	±60	16
24	66	41	52	885	±40	±20	±60	16
26	76	46	59	1′016	±46	±23	±69	25
28	76	46	59	1′032	±46	±23	±69	25
30	92	60	73	1′158	±52	±26	±78	40
32	92	60	73	1′175	±52	±26	±78	40
34	103	65	76	1′276	±62	±31	±93	52
36	103	65	76	1′293	±62	±31	±93	52

Remaining dimensions as for HYEND open sockets

(1) After swaging
(2) Total weight of all components

05-23 Subject to change.

HYEND open socket with turnbuckle

Corrosion protection Stainless steel (Inox) 1.4462 / 1.4470 [3]
Assembly Swaging in accordance with ETA-15/0917

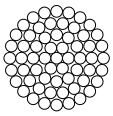

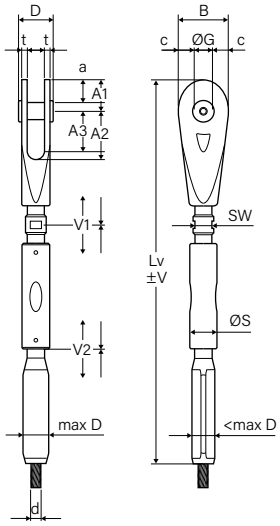

max d [mm]	∅ S [mm]	SW [mm]	~max D[1] [mm]	~Lv[1] [mm]	V1 [mm]	V2 [mm]	V [mm]	G[2] [kg]
6	23	14	15	292	±16	±8	±24	0.6
8	23	14	15	308	±16	±8	±24	0.6
10	30	19	23	437	±22	±11	±33	1.8
12	30	19	23	453	±22	±11	±33	1.8
14	40	26	31	568	±28	±14	±42	4.2
16	40	26	31	584	±28	±14	±42	4.2
18	48	32	38	709	±34	±17	±51	7.8
20	48	32	38	725	±34	±17	±51	7.8
22	58	36	45	850	±42	±21	±63	13
24	58	36	45	866	±42	±21	±63	13
26	68	46	52	996	±49	±25	±74	21
28	68	46	52	1′013	±49	±25	±74	21
30	78	50	60	1′126	±54	±27	±81	31
32	78	50	60	1′143	±54	±27	±81	31
34	88	60	67	1′246	±60	±30	±90	43
36	88	60	67	1′262	±60	±30	±90	43

Remaining dimensions
as for HYEND open sockets

(1) After swaging
(2) Total weight of all components
(3) 1.4462 for machined parts; 1.4470 for cast parts equal in material properties and corrosion resistance.

05-23 Subject to change.

HYEND closed socket

Corrosion protection Hot-dip galvanized (internal thread blank)
Assembly Swaging in accordance with ETA-15/0917

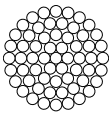

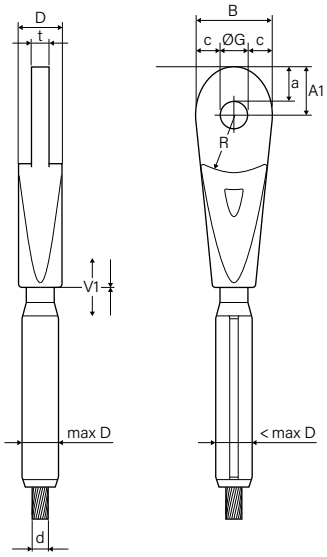

max d [mm]	B [mm]	c [mm]	∅ G(3) [mm]	R [mm]	D [mm]	a [mm]	t [mm]	A1 [mm]	~max D(1) [mm]	~Lv(1) [mm]	V [mm]	G(2) [kg]
6	38.0	11.5	15	28	21	16	8	23.5	18	197	±8	0.4
8	38.0	11.5	15	28	21	16	8	23.5	18	214	±8	0.4
10	57.5	17.8	22	43	33	25	13	36.0	26	295	±11	1.5
12	57.5	17.8	22	43	33	25	13	36.0	26	312	±11	1.5
14	75.5	23.8	28	56	44	34	18	47.5	34	388	±14	3.4
16	75.5	23.8	28	56	44	34	18	47.5	34	405	±14	3.4
18	93.5	29.8	34	70	52	42	22	59.0	45	493	±17	6.4
20	93.5	29.8	34	70	52	42	22	59.0	45	510	±17	6.4
22	111	34.8	41	82	63	49	26	69.5	52	587	±21	11
24	111	34.8	41	82	63	49	26	69.5	52	604	±21	11
26	128	39.8	48	95	74	56	31	80.0	59	689	±24	18
28	128	39.8	48	95	74	56	31	80.0	59	705	±24	18
30	145	44.8	55	107	84	63	35	90.5	73	780	±27	26
32	145	44.8	55	107	84	63	35	90.5	73	797	±27	26
34	158	47.8	62	117	94	68	40	99.0	76	847	±30	33
36	158	47.8	62	117	94	68	40	99.0	76	864	±30	34

(1) After swaging
(2) Total weight of all components
(3) Bolts not included in the delivery

05-23 Subject to change.

HYEND closed socket

Corrosion protection Stainless steel (Inox) 1.4462 / 1.4470 (4)
Assembly Swaging in accordance with ETA-15/0917

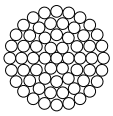

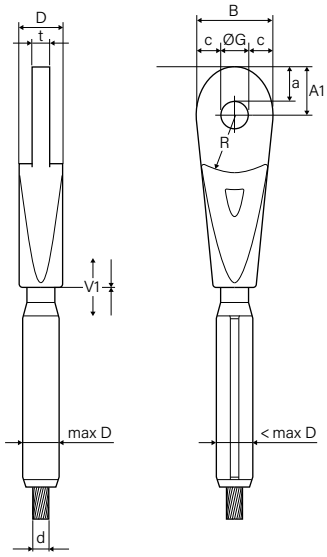

max d [mm]	B [mm]	c [mm]	∅ G(3) [mm]	R [mm]	D [mm]	a [mm]	t [mm]	A1 [mm]	~max D(1) [mm]	~Lv(1) [mm]	V [mm]	G(2) [kg]
6	38.0	11.5	15	28	21	16	8	23.5	15	189	±8	0.4
8	38.0	11.5	15	28	21	16	8	23.5	15	205	±8	0.4
10	57.5	17.8	22	43	33	25	13	36.0	23	287	±11	1.3
12	57.5	17.8	22	43	33	25	13	36.0	23	303	±11	1.3
14	75.5	23.8	28	56	44	34	18	47.5	31	376	±14	3.2
16	75.5	23.8	28	56	44	34	18	47.5	31	392	±14	3.2
18	93.5	29.8	34	70	52	42	22	59.0	38	472	±17	5.7
20	93.5	29.8	34	70	52	42	22	59.0	38	488	±17	5.7
22	111	34.8	41	82	63	49	26	69.5	45	570	±21	9.9
24	111	34.8	41	82	63	49	26	69.5	45	586	±21	9.9
26	128	39.8	48	95	74	56	31	80.0	52	670	±25	16
28	128	39.8	48	95	74	56	31	80.0	52	687	±25	16
30	145	44.8	55	107	80	63	35	90.5	60	754	±27	22
32	145	44.8	55	107	80	63	35	90.5	60	771	±27	22
34	158	47.8	62	117	94	68	40	99.0	67	827	±30	31
36	158	47.8	62	117	94	68	40	99.0	67	843	±30	31

(1) After swaging
(2) Total weight of all components
(3) Bolts not included in the delivery
(4) 1.4462 for machined parts; 1.4470 for cast parts equal in material properties and corrosion resistance

05-23 Subject to change.

HYEND threaded stud

Corrosion protection Hot-dip galvanized
Assembly Swaging in accordance with ETA-15/0917
Other components Hexagon nut in accordance with DIN 934
Washer in accordance with DIN 125-A

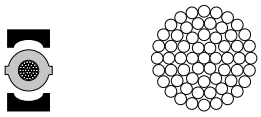

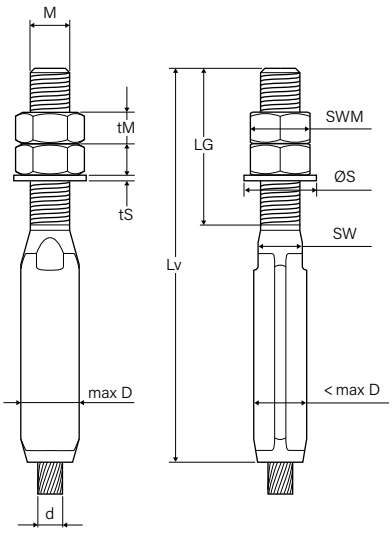

max d [mm]	M	LG [mm]	~max D(1) [mm]	~max Lv(1) [mm]	Sw [mm]	∅ S [mm]	tS [mm]	SWM [mm]	tM [mm]	G(2) [kg]
6	14 × 2	60	18	139	–	28	2.5	22	11	0.2
8	16 × 2	60	18	156	–	30	3.0	24	13	0.3
10	20 × 2.5	80	26	200	21	37	3.0	30	16	0.6
12	22 × 2.5	80	26	217	24	39	3.0	32	18	0.7
14	27 × 3	110	34	272	27	50	4.0	41	22	1.6
16	30 × 3.5	110	34	289	32	56	4.0	46	24	1.7
18	33 × 3.5	130	45	346	36	60	5.0	50	26	2.9
20	36 × 4	130	45	363	41	66	5.0	55	29	3.2
22	39 × 4	160	52	415	41	72	6.0	60	31	4.6
24	42 × 4.5	160	52	432	46	78	8.0	65	34	4.9
26	45 × 4.5	190	59	487	50	85	8.0	70	36	7.5
28	48 × 5	190	59	503	50	92	8.0	75	38	7.9
30	52 × 5	220	73	569	60	98	8.0	80	42	13
32	56 × 5.5	220	73	586	60	105	10.0	85	45	14
34	60 × 5.5	250	76	629	65	110	10.0	90	48	16
36	64 × 6	250	76	646	65	115	10.0	95	51	17

(1) After swaging
(2) Total weight of all components

05-23 Subject to change.

HYEND threaded stud

Corrosion protection Stainless steel (Inox) 1.4462
Assembly Swaging in accordance with ETA-15/0917
Other components Hexagon nut in accordance with DIN 934-A4
Washer in accordance with DIN 125-A-A4

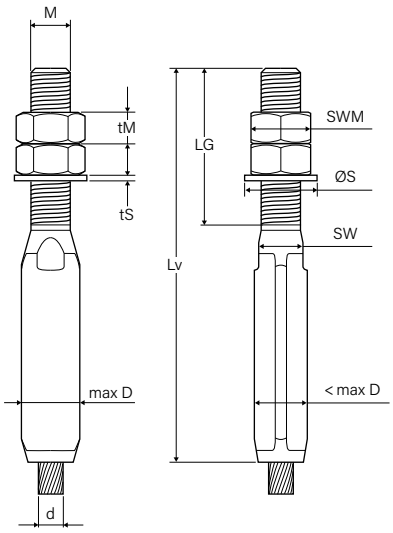

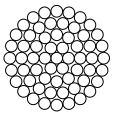

max d [mm]	M	LG [mm]	~max D(1) [mm]	~max Lv(1) [mm]	Sw [mm]	∅ S [mm]	tS [mm]	SWM [mm]	tM [mm]	G(2) [kg]
6	12 × 1.75	60	15	134	–	24	2.5	19	10	0.2
8	12 × 1.75	60	15	150	–	24	2.5	19	10	0.2
10	18 × 2.5	80	23	194	20	34	3.0	27	15	0.5
12	18 × 2.5	80	23	210	20	34	3.0	27	15	0.5
14	22 × 2.5	110	31	270	27	39	3.0	32	18	1.2
16	22 × 2.5	110	31	286	27	39	3.0	32	18	1.2
18	27 × 3	130	38	336	32	50	4.0	41	22	2.0
20	27 × 3	130	38	352	32	50	4.0	41	22	2.0
22	33 × 3.5	160	45	404	36	60	5.0	50	26	3.3
24	33 × 3.5	160	45	420	36	60	5.0	50	26	3.3
26	39 × 4	190	52	472	41	72	6.0	60	31	5.1
28	39 × 4	190	52	489	41	72	6.0	60	31	5.1
30	45 × 4.5	220	60	543	50	85	7.0	70	36	7.9
32	45 × 4.5	220	60	560	50	85	7.0	70	36	7.9
34	48 × 5	250	67	619	60	92	8.0	75	38	11
36	48 × 5	250	67	635	60	92	8.0	75	38	11

(1) After swaging
(2) Total weight of all components

05-23 Subject to change.

HYEND spelter socket

Corrosion protection Hot-dip galvanized
Assembly Spelter in accordance with ETA-15/0917 with synthetic resin (e.g. WIRELOCK®) or metal (e.g. Zamak)

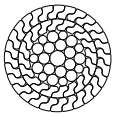
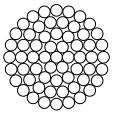

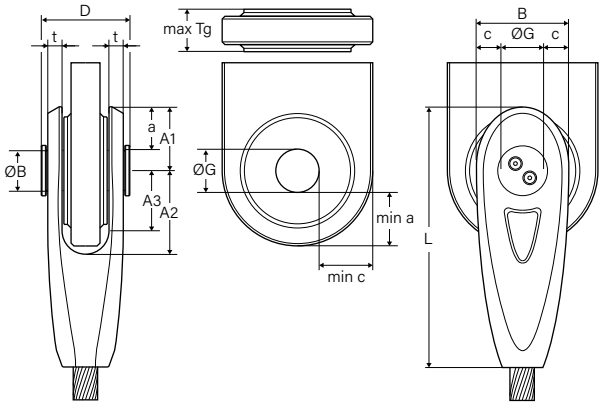

max d [mm]	B [mm]	D [mm]	L [mm]	a [mm]	c [mm]	∅ B [mm]	∅ G [mm]	t [mm]	A1 [mm]	A2 [mm]	A3 [mm]	max Tg(3) [mm]	G(1) [kg]	G(2) [kg]	min a [mm] min c [mm]
25	100	100	287	48.5	27	45	47	17.0	72	80	56	44	8	1.3	In accordance with EN 1993-1-8 Chapter 3.13.1, Table 3.9
30	111	108	312	51.0	30	49	52	17.5	77	99	71	50	10	1.6	
35	129	123	363	59.5	35	56	59	20.0	89	117	84	60	15	2.3	
40	148	138	412	66.0	40	65	68	23.0	100	135	98	69	22	3.4	
45	166	153	458	72.0	45	73	76	25.0	110	151	109	78	31	4.9	
50	186	171	518	80.0	50	83	86	28.0	123	171	124	88	45	7.8	
55	203	192	574	100	56	88	91	35.0	146	179	130	93	63	9.8	
60	224	211	635	110	61	100	103	39.0	161	199	144	104	83	13	
65	244	228	698	122	67	107	110	42.0	177	218	158	115	109	17	
70	268	247	763	134	74	117	120	46.0	194	238	172	126	142	22	
75	292	268	828	145	81	128	131	50.0	210	258	187	137	186	29	
80	313	287	884	153	87	137	140	54.0	223	278	201	148	227	33	
85	334	305	940	162	93	145	148	57.0	236	298	215	160	271	39	
90	354	325	996	171	99	154	157	61.0	249	316	228	170	326	49	
95	375	343	1'053	180	105	162	165	64.0	263	335	242	182	386	57	
100	395	361	1'110	191	111	171	174	68.0	278	352	253	192	454	67	
105	414	373	1'168	203	116	180	183	69.0	294	367	263	202	512	73	
110	434	383	1'228	212	121	189	192	69.0	308	385	276	212	578	83	
115	455	399	1'286	223	126	200	203	69.0	324	404	290	222	655	102	
120	476	414	1'344	233	132	210	213	71.5	339	422	303	232	742	116	
125	496	426	1'401	242	137	220	223	71.5	353	441	317	242	822	131	
130	517	446	1'460	252	142	230	233	76.5	368	459	330	252	940	149	
135	537	466	1'521	263	147	240	243	81.5	384	476	342	262	1'070	169	

(1) Total weight of all components (without spelter material)
(2) Weight of bolts
(3) Maximum design value. Load-bearing capacity verification at customer site in accordance with EN 1993-1-8

05-23 Subject to change.

HYEND spelter socket

Corrosion protection Stainless steel (Inox) 1.4462 / 1.4470 (3)
Assembly Spelter in accordance with ETA-15/0917 with synthetic resin (e.g. WIRELOCK®)

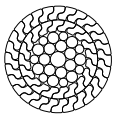
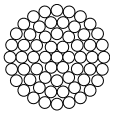

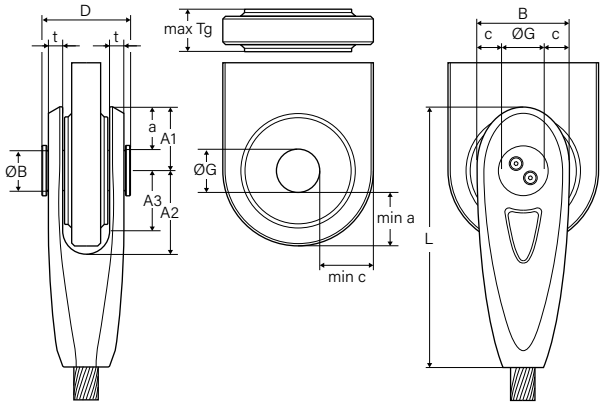

max d [mm]	B [mm]	D [mm]	L [mm]	a [mm]	c [mm]	∅ B [mm]	∅ G [mm]	t [mm]	A1 [mm]	A2 [mm]	A3 [mm]	max Tg(3) [mm]	G(1) [kg]	G(2) [kg]	min a [mm] min c [mm]
25	105	108	300	49.5	27	48	51	20.0	75	84	59	46	10	1.6	In accordance with EN 1993-1-8 Chapter 3.13.1, Table 3.9
30	116	117	326	50.5	29	56	59	21.0	80	104	75	52	13	2.4	
35	135	135	380	61.0	36	61	64	23.5	93	122	88	63	20	3.2	
40	155	154	432	68.0	41	71	74	27.5	105	141	102	72	29	5.0	
45	174	170	480	73.5	46	80	83	29.5	115	158	114	82	40	7.0	
50	195	189	543	82.0	51	91	94	33.0	129	179	130	92	58	10	
55	213	212	603	103.0	57	97	100	41.0	153	186	135	97	81	13	
60	235	237	666	113.0	61	110	113	45.5	169	208	151	109	111	18	
65	256	258	732	125.0	68	118	121	49.0	185	229	166	121	144	23	
70	281	281	800	137.0	75	129	132	54.0	203	250	181	132	191	30	
75	306	304	868	148.0	81	141	144	58.5	220	271	196	144	247	39	
80	330	329	928	157.0	88	151	154	63.5	234	291	211	155	297	48	

(1) Total weight of all components (without spelter material)
(2) Weight of bolts
(3) 1.4462 for machined parts; 1.4470 for cast parts equal in material properties and corrosion resistance
(4) Maximum design value. Load-bearing capacity verification at customer site in accordance with EN 1993-1-8

05-23 Subject to change.

HYEND adjustable open spelter socket

Corrosion protection Hot-dip galvanized (internal thread blank)
Assembly Spelter in accordance with ETA-15/0917 with synthetic resin (e.g. WIRELOCK®) or metal (e.g. Zamak)

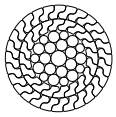

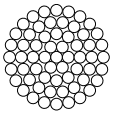

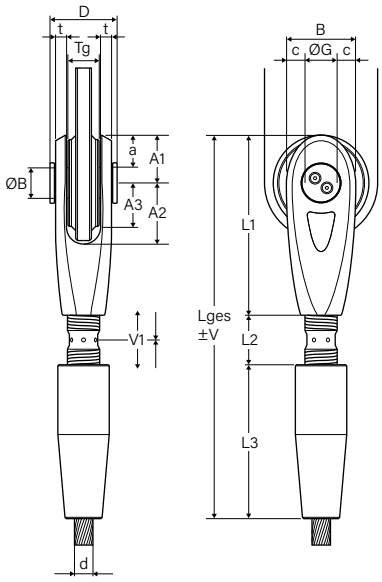

max d [mm]	L1 [mm]	L2 [mm]	L3 [mm]	V [mm]	Lges [mm]	G(1) [kg]
25	273	75	215	± 45	563	13
30	290	80	248	± 50	618	18
35	341	85	291	± 55	717	28
40	387	100	325	± 60	812	42
45	431	105	359	± 65	895	56
50	488	110	395	± 70	993	83
55	542	125	426	± 75	1'093	110
60	601	130	462	± 80	1'193	144
65	660	135	503	± 85	1'298	190
70	722	150	539	± 90	1'411	243
75	783	160	580	±100	1'523	316
80	836	170	626	±110	1'632	389
85	889	190	672	±120	1'751	465
90	942	200	713	±130	1'855	553
95	997	210	754	±140	1'961	697
100	1'052	230	795	±150	2'077	812
105	1'108	240	841	±160	2'189	921
110	1'163	250	882	±170	2'295	1'039
115	1'219	270	923	±180	2'412	1'176
120	1'274	280	964	±190	2'518	1'325
125	1'328	290	1'010	±200	2'628	1'504
130	1'385	310	1'051	±210	2'746	1'698
135	1'409	320	1'092	±220	2'821	1'905

Remaining dimensions as for HYEND open spelter sockets

(1) Total weight of all components (without spelter material) Hook wrench in accordance with DIN 1810 for adjusting the open socket available on request

05-23 Subject to change.

HYEND adjustable open spelter socket

Corrosion protection Stainless steel (Inox) 1.4462 / 1.4470 [2]
Assembly Spelter in accordance with ETA-15/0917 with synthetic resin (e.g. WIRELOCK®)

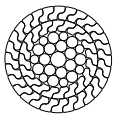

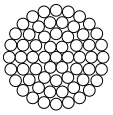

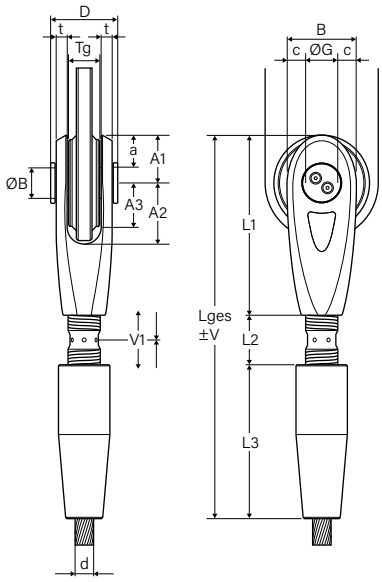

max d [mm]	L1 [mm]	L2 [mm]	L3 [mm]	V [mm]	Lges [mm]	G[1] [kg]
25	288	75	215	± 45	578	14
30	308	80	248	± 50	636	20
35	358	85	291	± 55	734	31
40	407	100	325	± 60	832	46
45	453	105	359	± 65	917	63
50	513	110	395	± 70	1'018	88
55	570	125	426	± 75	1'121	121
60	630	130	462	± 80	1'222	161
65	693	135	503	± 85	1'331	208
70	757	150	539	± 90	1'446	270
75	822	160	580	±100	1'562	345
80	878	170	621	±110	1'669	422

Remaining dimensions as for HYEND open spelter sockets

(1) Total weight of all components (without spelter material)
(2) 1.4462 for machined parts; 1.4470 for cast parts equal in material properties and corrosion resistance Hook wrench in accordance with DIN 1810 for adjusting the open sockets available on request

05-23 Subject to change.

HYEND conical spelter socket

Corrosion protection Hot-dip galvanized (internal thread blank)
Assembly Spelter in accordance with ETA-15/0917 with synthetic resin (e.g. WIRELOCK®) or metal (e.g. Zamak)

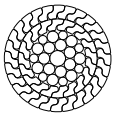
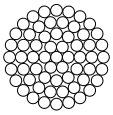

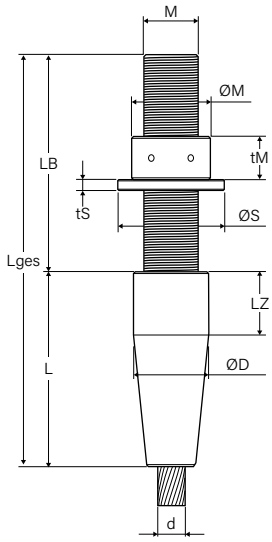

max d [mm]	M [mm]	L_{ges} [mm]	LZ [mm]	L [mm]	∅D [mm]	LB [mm]	∅M [mm]	tM [mm]	∅S [mm]	tS [mm]	G(1) [kg]	G(2) [kg]	G(3) [kg]
25	50 × 3	375	60	175	67	200	73	40	98	10	7.0	3.8	0.8
30	60 × 3	446	70	206	83	240	88	48	118	12	13	6.7	1.3
35	70 × 4	522	80	242	93	280	103	56	138	14	20	11	2.1
40	76 × 4	573	86	269	108	304	113	61	153	16	27	14	2.8
45	85 × 4	639	95	299	118	340	128	68	168	17	37	19	4.1
50	95 × 4	710	105	330	138	380	143	76	188	19	53	26	5.7
55	105 × 4	781	115	361	148	420	158	84	208	21	70	36	7.6
60	115 × 4	852	125	392	158	460	173	92	228	23	89	47	9.9
65	125 × 4	928	135	428	178	500	188	100	248	25	119	60	13
70	135 × 4	999	145	459	188	540	203	108	268	27	146	76	16
75	145 × 4	1'070	155	490	208	580	218	116	288	29	185	94	20
80	150 × 6	1'116	160	516	218	600	223	120	298	30	209	104	21
85	160 × 6	1'192	170	552	228	640	238	128	318	32	261	126	26
90	170 × 6	1'263	180	583	238	680	253	136	338	34	283	151	31
95	180 × 6	1'334	190	614	278	720	268	144	358	36	399	198	37
100	190 × 6	1'405	200	645	288	760	283	152	378	38	440	211	43
105	200 × 6	1'481	210	681	298	800	298	160	398	40	505	247	51
110	210 × 6	1'552	220	712	308	840	313	168	418	42	576	285	58
115	220 × 6	1'623	230	743	318	880	328	176	438	44	653	328	67
120	230 × 6	1'694	240	774	328	920	343	184	458	46	736	375	77
125	240 × 6	1'770	250	810	348	960	358	192	478	48	850	426	87
130	250 × 6	1'841	260	841	358	1'000	373	200	498	50	949	482	98
135	260 × 6	1'912	270	872	368	1'040	388	208	518	52	1'056	542	110

(1) Total weight of all components (without spelter material)
(2) Weight of threaded rod
(3) Weight of round nut
Other threaded rod lengths on request
Spherical nut on request
Hook wrench in accordance with DIN 1810 for tightening the nut available on request

05-23 Subject to change.

HYEND conical spelter socket

Corrosion protection Stainless steel (Inox) 1.4462
Assembly Spelter in accordance with ETA-15/0917 with synthetic resin (e.g. WIRELOCK®)

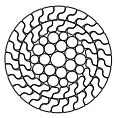
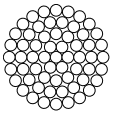

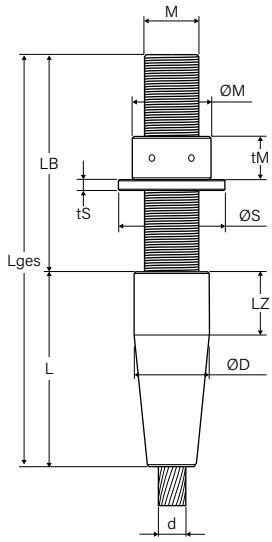

max d [mm]	M [mm]	L_{ges} [mm]	LZ [mm]	L [mm]	∅D [mm]	LB [mm]	∅M [mm]	tM [mm]	∅S [mm]	tS [mm]	G(1) [kg]	G(2) [kg]	G(3) [kg]
25	45 × 4.5	350	55	170	68	180	68	36	88	9	6	2.8	0.6
30	52 × 5	406	62	198	88	208	78	42	103	11	11	4.3	1.0
35	64 × 6	492	74	236	98	256	98	52	128	13	18	8	2.0
40	72 × 6	553	82	265	113	288	108	58	143	15	26	11	2.6
45	80 × 4	614	90	294	128	320	118	64	158	16	36	16	3.2
50	90 × 4	685	100	325	143	360	133	72	178	18	50	22	4.5
55	95 × 4	731	105	351	158	380	143	76	188	19	62	26	5.6
60	105 × 4	802	115	382	173	420	158	84	208	21	83	35	7.6
65	115 × 4	878	125	418	188	460	173	92	228	23	108	47	9.9
70	125 × 4	949	135	449	203	500	188	100	248	25	138	60	13
75	135 × 4	1'020	145	480	218	540	203	108	268	27	172	75	16
80	145 × 4	1'091	155	511	233	580	218	116	288	29	211	93	20

(1) Total weight of all components (without spelter material)
(2) Weight of threaded rod
(3) Weight of round nut
Other threaded rod lengths on request
Spherical nut on request
Hook wrench in accordance with DIN 1810 for tightening the nut available on request

05-23 Subject to change.

HYEND cylindrical spelter socket with internal and external thread

Corrosion protection Hot-dip galvanized (internal thread blank)
Assembly Spelter in accordance with ETA-15/0917 with synthetic resin (e.g. WIRELOCK®) or metal (e.g. Zamak)

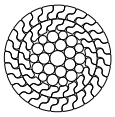
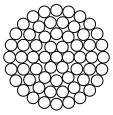

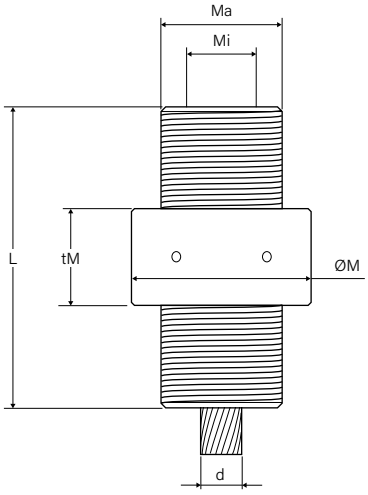

max d [mm]	Ma [mm]	Mi [mm]	∅M [mm]	tM [mm]	L [mm]	G(1) [kg]	G(2) [kg]
25	76 × 4	50 × 3	113	61	195	7.2	2.8
30	90 × 4	60 × 3	133	72	230	12	4.5
35	100 × 4	70 × 4	148	80	270	16	6.2
40	115 × 4	76 × 4	173	92	301	25	10
45	125 × 4	85 × 4	188	100	335	32	13
50	145 × 4	95 × 4	218	116	370	50	20
55	155 × 6	105 × 4	233	124	405	61	25
60	175 × 6	115 × 4	263	140	440	87	35
65	185 × 6	125 × 4	278	148	480	103	41
70	200 × 6	135 × 4	298	160	515	129	51
75	220 × 6	145 × 4	328	176	550	171	67
80	230 × 6	150 × 6	343	184	580	196	77
85	240 × 6	160 × 6	358	192	620	223	87
90	250 × 6	170 × 6	373	200	655	251	98
95	290 × 8	180 × 6	433	232	690	393	153
100	300 × 8	190 × 6	448	240	725	436	171
105	310 × 8	200 × 6	463	248	765	480	187
110	320 × 8	210 × 6	478	256	800	527	205
115	330 × 8	220 × 6	493	264	835	576	225
120	350 × 8	230 × 6	523	280	870	687	268
125	360 × 8	240 × 6	538	288	910	749	292
130	370 × 8	250 × 6	553	296	945	811	317
135	380 × 8	260 × 6	578	308	980	902	369

(1) Total weight of all components (without spelter material)
(2) Weight of round nut
Spherical nut on request
Hook wrench in accordance with DIN 1810 for tightening the nut available on request

05-23 Subject to change.

HYEND cylindrical spelter socket with internal and external thread

Corrosion protection Stainless steel (Inox) 1.4462
Assembly Spelter in accordance with ETA-15/0917
with synthetic resin (e.g. WIRELOCK®)

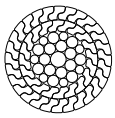
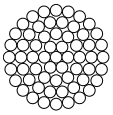

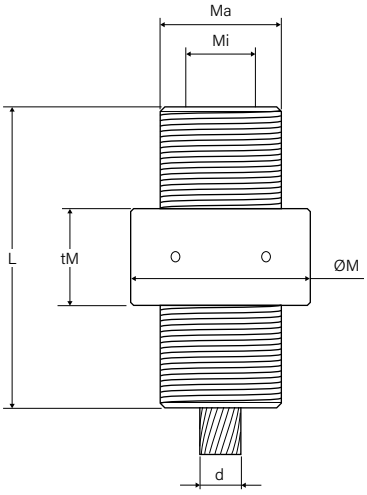

max d [mm]	Ma [mm]	Mi [mm]	∅M [mm]	tM [mm]	L [mm]	G(1) [kg]	G(2) [kg]
25	76 × 4	45 × 4.5	113	61	190	7.2	2.8
30	90 × 4	52 × 5	133	72	222	12	4.5
35	100 × 4	64 × 6	148	80	264	16	6.2
40	115 × 4	72 × 6	173	92	297	25	9.9
45	130 × 4	80 × 4	193	104	330	35	14
50	140 × 4	90 × 4	208	112	365	44	17
55	155 × 6	95 × 4	233	124	395	61	24
60	170 × 6	105 × 4	253	136	430	79	31
65	185 × 6	115 × 4	278	148	470	103	41
70	195 × 6	125 × 4	293	156	505	120	48
75	210 × 6	135 × 4	313	168	540	148	58
80	220 × 6	145 × 4	328	176	575	169	67

(1) Total weight of all components (without spelter material)
(2) Weight of round nut
Spherical nut on request
Hook wrench in accordance with DIN 1810 for tightening the nut available on request

05-23 Subject to change.

HYEND take-up spelter socket

Corrosion protection Hot-dip galvanized (internal thread blank)
Assembly Spelter in accordance with ETA-15/0917 with synthetic resin (e.g. WIRELOCK®) or metal (e.g. Zamak)

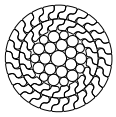

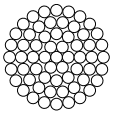

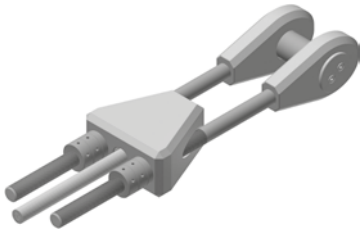

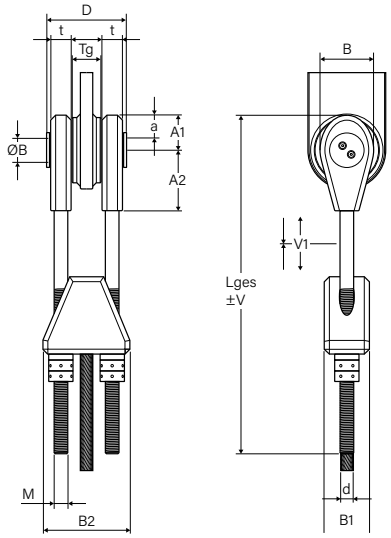

max d [mm]	B [mm]	B1 [mm]	B2 [mm]	D [mm]	a [mm]	∅B [mm]	t [mm]	A1 [mm]	A2 [mm]	M [mm]	V [mm]	Lges [mm]	max Tg [mm]	G(1) [kg]
25	110	94	182	170	47	50	40	73	124	27 × 3	±160	750	65	22
30	131	110	213	195	55	59	50	86	149	33 × 3.5	±160	829	70	36
35	147	125	243	224	62	67	60	97	171	39 × 4	±160	905	75	54
40	172	141	279	266	73	76	68	112	192	42 × 4.5	±160	979	95	78
45	191	159	312	284	81	87	75	126	217	48 × 5	±160	1′059	105	110
50	211	177	333	305	89	95	80	138	237	52 × 5	±160	1′132	105	141
55	233	195	377	338	99	105	90	153	267	60 × 5.5	±210	1′322	118	194
60	257	211	404	360	109	115	95	168	290	64 × 6	±210	1′405	130	245
65	280	229	435	385	119	124	100	182	311	68 × 6	±210	1′476	145	307
70	301	247	463	409	129	131	105	196	333	72 × 6	±210	1′552	157	373
75	323	266	491	439	137	141	115	209	353	76 × 4	±210	1′625	165	460
80	346	281	518	460	148	150	120	224	376	80 × 4	±260	1′804	176	551
85	363	299	552	491	155	159	130	236	398	85 × 4	±260	1′883	187	661
90	386	318	583	522	165	168	135	250	421	90 × 4	±260	1′961	200	785
95	409	336	616	556	174	179	145	265	446	95 × 4	±260	2′044	210	930
100	431	351	666	594	183	189	160	279	479	105 × 4	±260	2′141	218	1′107
105	452	370	698	618	193	198	165	293	502	110 × 4	±310	2′318	230	1′283
110	474	388	731	648	202	208	175	307	526	115 × 4	±310	2′395	240	1′471
115	497	406	764	677	212	217	180	322	550	120 × 4	±310	2′477	255	1′673
120	514	422	794	704	219	226	190	333	571	125 × 4	±310	2′559	262	1′898
125	540	440	829	730	230	236	195	349	596	130 × 4	±310	2′639	278	2′142
130	549	458	862	760	234	241	205	356	613	135 × 4	±310	2′721	288	2′401
135	591	476	895	785	253	249	210	379	645	140 × 4	±310	2′825	303	2′724

(1) Total weight of all components (without spelter material)
Other adjustment travel on request

05-23 Subject to change.

HYEND cylindrical spelter socket

Corrosion protection Hot-dip galvanized
Assembly Spelter in accordance with ETA-15/0917 with synthetic resin (e.g. WIRELOCK®) or metal (e.g. Zamak)

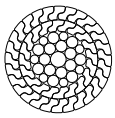

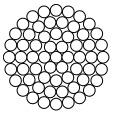

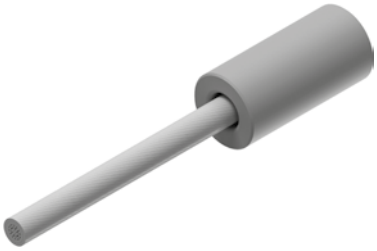

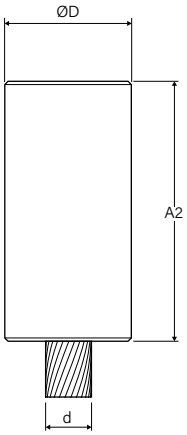

max d [mm]	L [mm]	∅D [mm]	G(1) [kg]
25	145	67	2.1
30	170	83	4.1
35	200	93	5.9
40	225	108	9.2
45	250	118	12
50	275	138	19
55	300	148	23
60	325	158	28
65	355	178	41
70	380	188	48
75	405	208	66
80	430	218	75
85	460	228	86
90	485	248	112
95	510	278	159
100	535	288	176
105	565	298	196
110	590	308	215
115	615	319	238
120	640	338	284
125	670	348	311
130	695	358	337
135	720	368	364

(1) Weight of cylindrical spelter socket

05-23 Subject to change.

TRUpin

Corrosion protection Hot-dip galvanized
Protection class IP66
Measurement accuracy 0 to 50 % of F_{Rd}: ± 0,5 % × F_{Rd}
50 to 80 % of F_{Rd}: ± 2,0 % × F_{Rd}
80 to 100 % of F_{Rd}: according to calibration report
Calibration certificate Each TRUpin has an individual calibration certificate.
Working range (compensated): –10 °C to +60 °C
Operating temperature: –20 °C to +70 °C

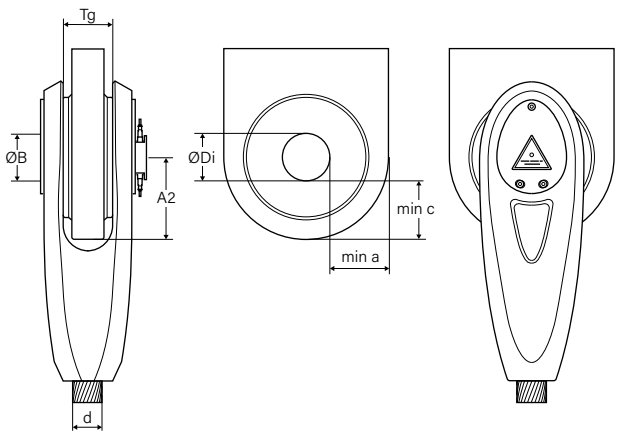

max d [mm]	Limit tension F_{Rd} [kN]	ØB	min Tg(1) [mm]	max Tg [mm]	A2 [mm]	ØDi [mm]	min a [mm]	min c [mm]
18	199	33	23	28	89	34	In accordance with EN 1993-1-8 Chapter 3.13.1, Table 3.9	
20	245	33	23	28	89	34		
22	297	40	28	35	107	41		
24	355	40	28	35	107	41		
26	416	47	33	41	123	48		
28	475	47	33	41	123	48		
30	544	54	37	47	140	55		
32	620	54	37	47	140	55		
34	702	61	41	52	154	62		
36	779	61	41	52	154	62		
25	397	46	36	44	80	47	In accordance with EN 1993-1-8 Chapter 3.13.1, Table 3.9	
30	572	51	42	50	99	52		
35	780	58	49	60	117	59		
40	1'053	67	56	69	135	68		
45	1'333	75	63	78	151	76		
50	1'647	85	70	88	171	86		
55	2'013	90	74	93	179	91		
60	2'393	102	82	104	199	103		
65	2'813	109	90	115	218	110		
70	3'260	119	99	126	238	120		
75	3'747	130	107	137	258	131		
80	4'260	139	115	148	278	140		
85	4'807	147	124	160	298	148		
90	5'393	156	132	170	316	157		
95	6'073	164	141	182	335	165		
100	6'733	173	148	192	352	174		
105	7'400	182	156	202	367	183		
110	8'133	191	163	212	385	192		
115	8'933	202	171	222	404	203		
120	9'667	212	178	232	422	213		
125	10'533	222	186	242	441	223		
130	10'800	232	193	252	459	233		
135	11'600	242	201	262	476	243		

(1) Minimum design value.
Load-bearing capacity verification at customer site in accordance with EN 1993-1-8

TRUpin

Corrosion protection Stainless steel (Inox)
Protection class IP66
Measurement accuracy 0 to 50 % of F_{Rd}: ± 0,5 % × F_{Rd}
50 to 80 % of F_{Rd}: ± 2,0 % × F_{Rd}
80 to 100 % of F_{Rd}: according to calibration report
Calibration certificate Each TRUpin has an individual calibration certificate.
Working range (compensated): –10 °C to +60 °C
Operating temperature: –20 °C to +70 °C

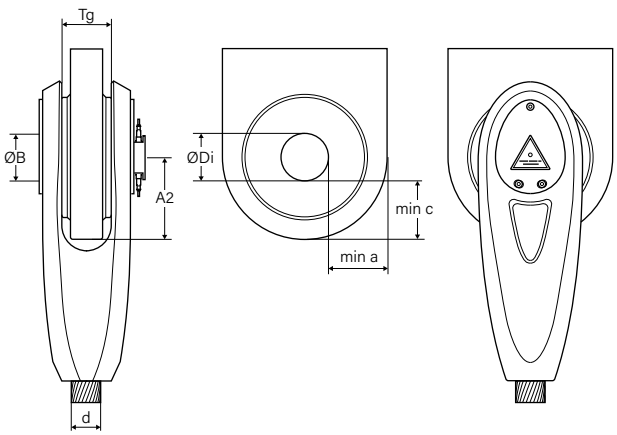

max d [mm]	Limit tension F_{Rd} [kN]	∅B	min Tg(1) [mm]	max Tg [mm]	A2 [mm]	∅Di [mm]	min a [mm]	min c [mm]
18	165	33	23	28	89.5	34	In accordance with EN 1993-1-8 Chapter 3.13.1, Table 3.9	
20	204	33	23	28	89.5	34		
22	246	40	28	35	107	41		
24	294	40	28	35	107	41		
26	343	47	33	41	123	48		
28	397	47	33	41	123	48		
30	452	54	35	44	140	55		
32	513	54	35	44	140	55		
34	581	61	41	52	154	62		
36	650	61	41	52	154	62		
25	347	51	38	46	84	51	In accordance with EN 1993-1-8 Chapter 3.13.1, Table 3.9	
30	499	59	43	52	104	59		
35	680	64	51	63	122	64		
40	908	74	58	72	141	74		
45	1'151	83	66	82	158	83		
50	1'431	94	73	92	179	94		
55	1'732	100	77	97	186	100		
60	2'021	113	86	109	208	113		
65	2'425	121	95	121	229	121		
70	2'779	132	103	132	250	132		
75	3'138	144	112	144	271	144		
80	3'646	154	120	155	291	154		

(1) Minimum design value.
Load-bearing capacity verification at customer site in accordance with EN 1993-1-8

05-23 Subject to change.

Quality and standards

Wire product standards	
▪ EU standard for carbon steel round wire	DIN EN 10264-2
▪ EU standard for carbon steel shaped wire	DIN EN 10264-3
▪ EU standard for stainless steel round wire	DIN EN 10264-4
▪ US standard for stainless steel wires	ASTM A492
▪ US standard for carbon steel wires coated with Zn95Al5	ASTM A856

Rope product standards	
▪ EU standard for spiral ropes for use in general construction	DIN EN 12385-10
▪ US standard for spiral strand ropes made from stainless steel wires	ASTM A368
▪ US standard for spiral strand ropes made from carbon steel wires with zinc coating	ASTM A475
▪ US standard for spiral strand ropes used in construction made from carbon steel wires with zinc coating	ASTM A586
▪ US standard for ropes made of carbon steel wires with Zn95Al5 coating	ASTM A855
▪ Norwegian delivery specification for bridge ropes	Håndbok R410
▪ German delivery specification for bridge ropes	TL/TP-VVS

Casting product standards	
▪ EU standard – Technical delivery conditions for the foundry industry	DIN EN 1559
▪ EU standard for corrosion resistant cast steel	DIN EN 10283
▪ EU standard for cast steel for general applications	DIN EN 10293
▪ EU standard for cast steel for the construction industry	DIN EN 10340

Approvals	
▪ European Technical Assessment (ETA) for FATZER HYEND rope assemblies	ETA-15/0917

Design standards	
▪ EU standard for design and construction of structures with rope assemblies	DIN EN 1993-1-11
▪ US standard for design and construction of structures with rope assemblies	ASCE 19

Quality assurance	
▪ EU standard – Requirements for quality management systems	DIN EN ISO 9001

Wire tests

- Chemical analysis
- Tensile strength
- Elongation at break
- Number of bends
- Number of torsions
- Mass of coating
- Fatigue test
- Wrap test

Rope tests

- Breaking load test
- E-modulus test
- Creep test
- Fatigue test

Roofing at Autostadt Wolfsburg

The roofing design for this building is modeled on the idea of a "leaf in the landscape". The roof consists of a gabled surface that blends into its hilly surroundings easily and harmoniously with only two minimalist points of contact with the ground.

Customer: Eiffel Deutschland Stahltechnologie GmbH
Ropes used: OSS ∅20 mm, 35 × 28 m,
OSS ∅24 mm, 24 × 43 m

Schorgast road bridge

FATZER is proud to have played its part in this road bridge in Bavaria, which was nominated for the German Engineering Award. A total of 1,300 m of premium 110 mm fully locked cable systems were manufactured and installe d together with special dampers and neoprene sleeves. The assembled coil ropes were manufactured and tested in accordance with the German delivery – specification for bridge ropes (TL/TP VVS). As part of the testing, a rope test specimen was subjected to 2 million load changes with an oscillation width of 150 N/mm² applied. The full minimum breaking load of the rope was achieved in the final breaking load test.

Customer: Züblin Stahlbau GmbH
Ropes used: FLC ∅110 mm, 1'300 m

Features

Aesthetics

- Most favorable ratio of breaking load to diameter of all high-strength assemblies
- Suitable for saving materials and appealing architectural structures
- Fully locked coil rope has flat and visually smooth rope surface
- Stainless steel (Inox) for a sophisticated appearance and durable corrosion resistance

Breaking strength

- Swaging: 90% load transmission
- Spelter: 100% load transmission
- Unalloyed carbon steel ropes better than stainless steel ropes (Inox)

E-Modulus

- E-modulus lower than that of the wire material due to the helical structure
- Carbon steel ropes (160 $kN/mm^2 \pm 10\ kN/mm^2$)
- Stainless steel (Inox) ropes (130 $kN/mm^2 \pm 10\ kN/mm^2$)

Corrosion resistance

- Zn95Al5 coating (e.g. Galf an®) or zinc coating
- Interior filling with zinc dust paint (TRULub A11®)
- Stainless steel (Inox)
- Closed surface due to Z-profile wires

Length accuracy

- Setting of the wire bond and permanent elongation during the first load cycles
- The setting is largely eliminated through elongation
- The rope lengths are marked on the rope following elongation under load and temperature controls
- Length tolerance in mm $= \pm (5 + \sqrt{\text{length [m]}})$

Creep

- Finite creep subject to load for ropes with galvanized wires (approx. 0.35 mm / m)
- Virtually no creep in ropes with stainless steel (Inox) wires

Fatigue

- Unalloyed carbon steel ropes better than stainless steel ropes (Inox)
- Spelter better than swaging
- Standard quality assurance test: 2 million load changes at 150 N / mm^2 Double amplitude in the rope

Handling

- Stable cross-section geometry due to helical arrangement of the wires
- Transportation in rings or on bobbins
- Ready for installation on the construction site

Clamping and deflecting

- Suitable for saddles and rope clamps
- $R = 30 \times d$ in accordance with standard, $R = 20 \times d$ and narrower possible

Passion for coil ropes meets a
consistent focus on the customer.

FATZER. Steel rope innovations with tradition

Since 1836, FATZER has specialized in the production of premium-quality ropes. It focuses today on the development, production, and sale of technically sophisticated wire ropes for buildings, bridges, and other structures. Excellent client service remains our priority. Customers benefit from our comprehensive expertise in engineering, certification, assembly, logistics, and support.

Always by your side
People all over the world rely on FATZER coil ropes, from cableways across major cities to strength members in imposing steel structures. Thanks to our global presence, we are always by your side. Our services cover all installation processes in addition to coil rope development and sales. We support you from planning your project to the inspection and maintenance of the installed product.

FATZER as part of the BRUGG Group
FATZER is part of the international BRUGG Group. In addition to rope technology, the Group also specializes in safety nets, elevator ropes, piping systems, and process control technology. Together we stand for the best in quality and customer service. We are happy to discuss your project requirements and illustrate how you can benefit from our combined expertise.

Rope monitoring

Take advantage of our innovative solutions for coil rope monitoring and discover how maximum safety and lower maintenance costs can benefit you.

High-performance ropes

Our high-performance ropes are used in ropeways as sustainable mobility solutions. Whether you present a tourist region, urban center, or industrial application, we are happy to support you.

ETA-15/0917

FATZER AG
Hofstrasse 44
8590 Romanshorn • Switzerland
T +41 71 466 81 11 • fatzer.com

BRUGG Fatzer

Building Strong Connections